GWI

US

Series 3
Gas-Fired Water Boilers

Boiler Manual

Contents **Page**

1. Prepare Boiler Location 3
2. Prepare Boiler. 7
3. Vent Installation 8
4. Install Water Piping. 13
5. Water Piping — Multiple Zones 16
6. Install Gas Piping 23
7. Field Wiring. 24
8. Start-Up 25
9. Checkout Procedure. 27
10. Department of Energy 28
11. Sequence of Operation. 29
13. Service and Maintenance. 36
14. Troubleshooting 40
15. Replacement Parts. 51
16. Dimensions. 56
17. Ratings 57

Hazard definitions

⚠DANGER Hazards that **will result severe** personal injury, death or substantial property damage.

⚠WARNING Hazards that **can result severe** personal injury, death or substantial property damage.

⚠CAUTION Hazards that **will or can result minor** personal injury or property damage.

NOTICE Special instructions on installation, operation or maintenance that are important but not related to personal injury or property damage.

⚠WARNING **INSTALLER —** Read all instructions before installing. **Read page 2 first**. Follow all instructions in proper order to prevent personal injury or death.

- Consider piping and installation when determining boiler location.
- Any claims for damage or shortage in shipment must be filed immediately against the transportation company by the consignee.

⚠WARNING **USER** — Please read the following. Failure to comply could result in severe personal injury, death or substantial property damage.

- **This manual is for use only by your qualified heating installer/service technician**.
- Please see the User's Information Manual for your reference.
- Have the boiler serviced by a qualified service technician, at least annually.

⚠WARNING This manual must only be used by a **qualified heating installer/service technician.** Failure to comply could result in severe personal injury, death or substantial property damage.

NOTICE When calling or writing about the boiler — Please have: • boiler model number from the boiler rating label and • Consumer Protection (CP) number from the boiler jacket. You may list the CP number in the space provided on the "Installation and service certificate" found on **page 28**.

Part Number 550-100-631/0926

Read this first!

WARNING **Failure to adhere to the guidelines on this page can result in severe personal injury, death or substantial property damage.**

WARNING The boiler contains ceramic fiber and fiberglass materials. Use care when handling these materials per instructions on page 58 of this manual. Failure to comply could result in severe personal injury.

When Servicing Boiler —

- To avoid electric shock, disconnect electrical supply before performing maintenance.
- To avoid severe burns, allow boiler to cool before performing maintenance.

Carbon Monoxide Detector —

- The installer must verify that at least one carbon monoxide alarm has been installed and is operational within a residential living space or home following the alarm manufacturer's instructions and applicable local codes before putting the appliance into operation.

Boiler Operation —

- Do not block flow of combustion or ventilation air to boiler.
- Should overheating occur or gas supply fail to shut off, do not turn off or disconnect electrical supply to circulator. Instead, shut off the gas supply at a location external to the appliance.
- Do not use this boiler if any part has been under water. Immediately call a qualified service technician to inspect the boiler and to replace any part of the control system and any gas control that has been under water.

Boiler Water —

- Before connecting the boiler, thoroughly flush the system to remove sediment. Install a strainer or other sediment removal equipment if necessary. The cast iron heat exchanger can be damaged by build-up or corrosion due to sediment.
- DO NOT use petroleum-based cleaning or sealing compounds in boiler system. Water seal deterioration will occur, causing leakage between boiler sections, circulator flanges, diaphragm tanks or other system components. This can result in substantial property damage.
- DO NOT use "homemade cures" or "boiler patent medicines". Serious damage to boiler, personnel and/or property may result.
- Continual fresh makeup water will reduce boiler life. Mineral buildup in sections reduces heat transfer, overheats cast iron, and causes section failure. Addition of oxygen and other gases can cause internal corrosion. Leaks in boiler or piping must be repaired at once to prevent makeup water.
- Do not add cold water to hot boiler. Thermal shock can cause sections to crack.

Glycol — Potential Fire Hazard —

All glycol is flammable when exposed to high temperatures. If glycol is allowed to accumulate in or around the boiler or any other potential ignition source, a fire can develop. In order to prevent potential severe personal injury, death or substantial property damage from fire and/or structural damage:

- Never store glycol of any kind near the boiler or any potential ignition source.
- Monitor and inspect the system and boiler regularly for leakage. Repair any leaks immediately to prevent possible accumulation of glycol.
- Never use automotive antifreeze or ethylene glycol in the system. Using these glycols can lead to hazardous leakage of glycol in the boiler system.

DANGER **If any part of a boiler, burner or its controls has been sprayed with or submerged under water, either partially or fully, DO NOT attempt to operate the boiler until the boiler has been either replaced or completely repaired, inspected, and you are sure that the boiler and all components are in good condition and fully reliable.** Otherwise, by operating this boiler, you will cause a fire or explosion hazard, and an electrical shock hazard, leading to serious injury, death, or substantial property damage.

Saltwater Damage — The exposure of boiler components to saltwater can have both immediate and long-term effects. While the immediate effects of saltwater damage are similar to those of freshwater (shorting out of electrical components, washing out of critical lubricants, etc.), the salt and other contaminants left behind can lead to longer term issues after the water is gone due to the conductive and corrosive nature of the salt residue. Therefore, Williamson-Thermoflo equipment contaminated with saltwater or polluted water will no longer be covered under warranty and should be replaced.

Electrical Damage — If any **electrical component** or **wiring** came into contact with water, or was suspected to have come into contact with water, replace the boiler with a new Williamson-Thermoflo boiler.

Freeze Protection Fluids —

NEVER use automotive or standard glycol antifreeze. Use only freeze-protection fluids made for hydronic systems. Follow all guidelines given by the antifreeze manufacturer. Thoroughly clean and flush any replacement boiler system that has used glycol before installing the new boiler.

CAUTION **Frozen Water Damage Hazard**

Residences or buildings that are unattended in severely cold weather, boiler system components failures, power outages, or other electrical system failures could result in frozen plumbing and water damage in a matter of hours. For your protection, take preventative actions such as having a security system installed that operates during power outages, senses low temperature, and initiates an effective action. Consult with your boiler contractor or a home security agency.

1. Prepare Boiler Location

Codes & Checklist

Installations must follow these codes:

- Local, state, and national codes, laws, regulations and ordinances.
- National Fuel Gas Code, ANSI Z223.1/NFPA 54 - latest edition.
- Standard for Controls and Safety Devices for Automatically Fired Boilers, ANSI/ASME CSD-1 – latest edition, when required.
- National Electrical Code ANSI/NFPA 70, - latest edition.

Certification

NOTICE The GWI boiler gas manifold and controls met safe lighting and other performance criteria when boiler underwent tests specified in ANSI Z21.13/NFPA 54 – latest edition.

Before locating the boiler:

☐ Check for nearby connection to:
- System water piping
- Venting connections
- Gas supply piping
- Electrical power

☐ Check area around boiler. Remove any combustible materials, gasoline and other flammable liquids.

⚠WARNING Failure to keep boiler area clear and free of combustible materials, gasoline and other flammable liquids and vapors can result in severe personal injury, death or substantial property damage.

☐ The boiler must be installed such that the gas ignition and control system components are protected from water (dripping, spraying, rain, etc.) during appliance operation and service (circulator replacement, condensate trap, control replacement, etc.).

☐ If new boiler will replace existing boiler, check for and correct system problems, such as:
1. System leaks causing oxygen corrosion or section cracks from hard water deposits.
2. Incorrectly-sized expansion tank.
3. Lack of antifreeze (when required) in boiler water causing system and boiler to freeze and leak.

Clearances

Service clearances

1. Provide minimum clearances for cleaning and servicing the boiler and for access to controls and components as listed in the table below:
2. Provide at least screwdriver clearance to jacket front panel screws for removal of front panel for inspection and minor service. If unable to provide at least screwdriver clearance, install unions and shutoff valves in system so boiler can be moved for servicing.

Service clearances:	Minimum
Top (for cleaning flue ways)	35”
Front (for access to controls and components)	18”
Back	7”
Left side (for cleaning and servicing)	24”
Right side	7”

Minimum clearance to combustible materials

1. Hot water pipes must be at least ½” from combustible material.
2. Single-wall vent pipe must be at least 2 inches from combustible material.
3. Type B double-wall metal vent pipe — see vent manufacturer’s recommendation for clearances to combustible material.

Figure 1 Minimum clearances

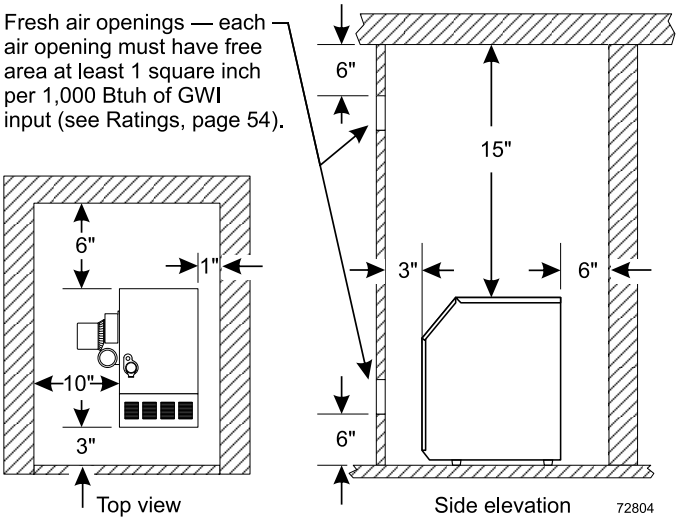

Small space installations

1. When the boiler is located in a closet or small space, provide clearances no less than those shown in **Figure 1**. The clearances are required to any surface, whether combustible or non-combustible.

1. Prepare Boiler Location (continued)

Residential Garage Installations

Take the following special precautions when installing the boiler in a residential garage, per ANSI Z223.1/NFPA 54, paragraph 5.1.9:

- Mount the boiler a minimum of **18 inches above the floor** of the garage to assure the burner and ignition devices will be no less than 18 inches above the floor.
- Locate or **protect the boiler** so it cannot be damaged by a moving vehicle.

Flooring and Foundation

Flooring

The GWI boiler is approved for installation on combustible flooring, but must never be installed on carpeting.

WARNING Do not install boiler on carpeting even if foundation is used. Fire can result, causing severe personal injury, death or substantial property damage.

Foundation

1. Provide a solid brick or minimum 2-inch thick concrete foundation pad if any of the following is true:
   - floor can become flooded.
   - the boiler mounting area is not level.
2. See **Table 1** or minimum foundation dimensions.

Table 1 Minimum foundation size

Boiler model	Minimum foundation length	Minimum foundation width
GWI-048	25”	12”
GWI-058	25”	12”
GWI-090	25”	15”
GWI-119	25”	18”
GWI-158	25”	21”
GWI-190	25”	24”

Vent System

WARNING Failure to follow all instructions can result in flue gas spillage and carbon monoxide emissions, causing severe personal injury or death.

DANGER Inspect existing chimney before installing boiler. Failure to clean or replace perforated pipe or tile lining will cause severe personal injury or death.

DANGER **Direct exhaust venting (Category III)** — **DO NOT COMMON** vent the GWI in a direct exhaust system (Category III). Connecting more than one appliance to a direct exhaust system will cause flue gas spillage or appliance malfunction, resulting in possible severe personal injury, death or substantial property damage.

NOTICE GWI boilers can be either chimney draft vented or direct-exhaust vented. See **pages 7 to 12** for detailed installation instructions.

If you are removing an existing boiler from a shared venting system and the new GWI boiler will not share the vent system (allowed only when chimney draft venting), you must test each remaining appliance individually to verify the vent system still operates adequately. Follow guidelines below.

When removing boiler from existing common vent system:

At the time of removal of an existing boiler, the following steps shall be followed with each appliance remaining connected to the common venting system placed in operation, while the other appliances remaining connected to the common venting system are not in operation.

a. Seal any unused openings in the common venting system.

b. Visually inspect the venting system for proper size and horizontal pitch and determine there is no blockage or restriction, leakage, corrosion or other deficiencies which could cause an unsafe condition.

c. Test vent system — Insofar as is practical, close all building doors and windows and all doors between the space in which the appliances remaining connected to the common venting system are located and other spaces of the building. Turn on clothes dryers and any appliance not connected to the common venting system. Turn on any exhaust fans, such as range hoods and bathroom exhausts, so they will operate at maximum speed. Do not operate a summer exhaust fan. Close fireplace dampers.

d. Place in operation the appliance being inspected. Follow the lighting/operating instructions. Adjust thermostat so appliance will operate continuously.

e. Test for spillage at draft hood relief opening after 5 minutes of main burner operation. Use the flame of a match or candle.

f. After it has been determined that each appliance remaining connected to the common venting system properly vents when tested as outlined above, return doors, windows, exhaust fans, fireplace dampers, and any other gas-burning appliance to their previous conditions of use.

Any improper operation of common venting system should be corrected so the installation conforms with the National Fuel Gas Code, ANSI Z223.1/NFPA 54 – latest edition. Correct by resizing to approach the minimum size as determined using the appropriate tables in Part 13 of that code.

1. Prepare Boiler Location (continued)

Vent System (continued)

Chimney draft vent requirements

1. Venting must be installed according to Part 7, Venting of Equipment, of National Fuel Gas Code, ANSI Z223.1/NFPA 54 - latest edition and applicable building codes.
2. Chimney or vent termination:
   - A chimney, or any vent other than a Type B vent with listed vent cap, must extend at least 3 feet above the highest point where it passes through a roof of a building, and at least 2 feet higher than any portion of a building within a horizontal distance of 10 feet.
   - Type B vents with listed caps may terminate as in **Figure 2** if no closer than 8 feet from a vertical wall or similar obstruction.
   - Otherwise, Type B vents must terminate at least 2 feet above the roof penetration and at least 2 feet higher than any portion of a building within 10 feet.
3. A lined chimney is preferred and must be used when required by local, state, and national codes, laws, regulations and ordinances. Vitreous tile linings with joints that prevent retention of moisture and linings made of noncorrosive materials are best. Advice for flue connections and chimney linings can be obtained from local gas utility. Type B double-wall metal vent pipe or single-wall vent pipe may be used as a liner.
4. Cold masonry chimneys, also known as outside chimneys, typically have one or more walls exposed to outside air.

   When any atmospheric gas-fired boiler with automatic vent damper is vented through this type of chimney, the potential exists for condensation to occur. Condensation can damage a masonry chimney. Manufacturer recommends the following to prevent possible damage.

   a. Line chimney with corrosion-resistant metal liner such as AL29-4C® single-wall stainless steel or B-vent. Size liner per National Fuel Gas Code ANSI Z223.1/NFPA 54 – latest edition.

   b. Provide drain trap to remove any condensate.
5. Where two or more gas appliances vent into a common chimney or vent, equivalent area should be at least equal to area of vent outlet on largest appliance plus 50 percent of vent outlet area of additional appliance.

Figure 2 Terminations with Type B vent fitted with listed cap, *provided vent is at least 8 feet from any vertical wall or similar obstruction.*

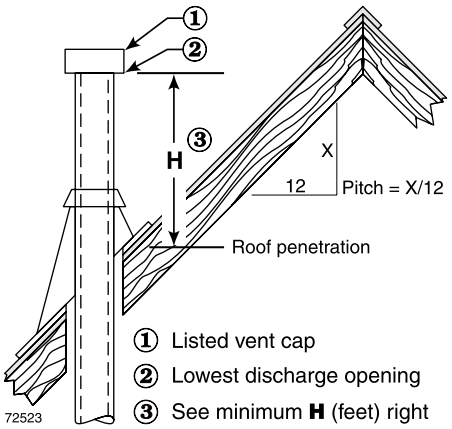

Pitch	H (min) (feet)
Flat to 6/12	1.0
6/12 to 7/12	1.25
over 7/12 to 8/12	1.5
over 8/12 to 9/12	2.0
over 9/12 to 10/12	2.5
over 10/12 to 11/12	3.25
over 11/12 to 12/12	4.0
over 12/12 to 14/12	5.0
over 14/12 to 16/12	6.0
over 16/12 to 18/12	7.0
over 18/12 to 20/12	7.5
over 20/12 to 21/12	8.0

Air Contamination

Please review the following information on potential combustion air contamination problems.

See **Table 2** for products and areas which may cause contaminated combustion air.

WARNING To prevent potential of severe personal injury or death, check for products or areas listed below before installing boiler. If any of these contaminants are found:

- remove contaminants permanently.

  — OR —
- isolate boiler and provide outside combustion air. See national, or local codes for further information.

Table 2 Corrosive contaminants and likely locations

Products to avoid
Spray cans containing chloro/fluorocarbons
Permanent wave solutions
Chlorinated waxes/cleaners
Chlorine-based swimming pool chemicals
Calcium chloride used for thawing
Sodium chloride used for water softening
Refrigerant leaks
Paint or varnish removers
Hydrochloric acid/muriatic acid
Cements and glues
Antistatic fabric softeners used in clothes dryers
Chlorine-type bleaches, detergents, and cleaning solvents found in household laundry rooms
Adhesives used to fasten building products and other similar products
Areas likely to have contaminants
Dry cleaning/laundry areas and establishments
Swimming pools
Metal fabrication plants
Beauty shops
Refrigeration repair shops
Photo processing plants
Auto body shops
Plastic manufacturing plants
Furniture refinishing areas and establishments
New building construction
Remodeling areas
Garages with workshops

1. Prepare Boiler Location (continued)

Air Openings

Combustion air and ventilation openings must comply with Section 5.3, “Air for Combustion and Ventilation”, of National Fuel Gas Code ANSI Z223.1/NFPA 54 – latest edition, or applicable local building codes.

See table below for minimum combustion/ventilation air opening sizes. Where openings are required, provide two (2) openings — one within 12 inches of the ceiling, the other within 12 inches of the floor, as shown in the table illustrations.

⚠WARNING Provide adequate combustion and ventilation air to assure proper combustion and reduce the risk of severe personal injury, death or substantial property damage caused by flue gas spillage and carbon monoxide emissions.

Minimum air opening sizes (See EXCEPTION below)

Required area of the air openings given in this table are **free area** — after the correction for louver obstruction.

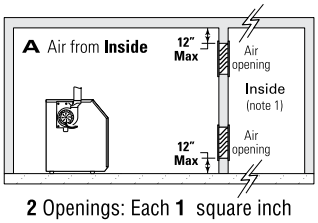

2 Openings: Each **1** square inch free area per **1,000** Btuh input of other appliances **plus** GWI input

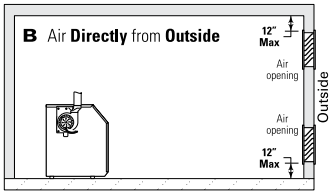

2 Openings: Each **1** square inch free area per **4,000** Btuh input of other appliances **plus** GWI input

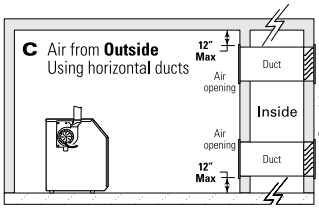

2 Openings: Each **1** square inch free area per **2,000** Btuh input of other appliances **plus** GWI input

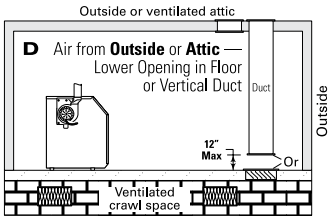

2 Openings: Each **1** square inch free area per **4,000** Btuh input of other appliances **plus** GWI input

EXCEPTION: NO combustion air openings are needed when the boiler (and other appliances) are installed in a space with a volume **NO LESS** than 50 cubic feet per 1,000 Btuh of all installed appliances. Sum the total input of all appliances in MBH (1,000's of Btuh) and multiply this number times 50. ***Building must not be of Tight construction*** (see definition below).

Example: For total input of 100 MBH (100,000 Btuh), minimum volume is 50 x 100 = 5,000 cubic feet. At a ceiling height of 8 feet, space must have at least 5,000 ÷ 8 = 625 square feet (25 feet x 25 feet, for instance).

Tight construction means (per ANSI Z223.1): • Walls and ceilings exposed to the outside atmosphere have a continuous water vapor retarder with a rating of 1 perm or less with openings gasketed. ***AND*** • Weather-stripping has been added on openable windows and doors. ***AND*** • Caulking or sealants are applied to areas such as joints around windows and door frames, between sole plates and floors, between wall-ceiling joints, between wall panels, at penetrations for plumbing, electrical, and gas lines, and in other openings.

Note 1: If building is of tight construction and air is taken from inside, as in A, provide two openings in building outside wall, one within 12 inches of ceiling, the other within 12 inches of the floor. Each opening must have a minimum free area of 1 square inch per 1,000 Btuh of all appliances in the building.

72840

Exhaust Fans and Air Movers

The appliance space must never be under a negative pressure. Always provide air openings sized not only to the dimensions required for the firing rate of all appliances, but also to handle the air movement rate of the exhaust fans or air movers using air from the building or space.

Motorized Air Dampers

If the air openings are fitted with motorized dampers, electrically interlock the damper to:

- Prevent the boiler from firing if the damper is not fully open.
- Shut the boiler down should the damper close during boiler operation.

To accomplish this interlock, wire an isolated contact (proving the damper open) in series with the thermostat input to the boiler. The boiler will not start if this contact is open, and will shut down should it open during operation.

2. Prepare Boiler

Placement and Setup

Place Boiler/Crate Near Position

1. Leave boiler in crate and on pallet until installation site is ready.
2. Move entire crate and pallet next to selected location.
3. Remove crate. Leave boiler on pallet.
4. Remove boiler from pallet as follows:
   a. Tilt left side of boiler up and place a board under left legs.
   b. Tilt boiler the other way and place a board under right legs.
   c. Slide boiler backwards off pallet and into position.

NOTICE Do not drop boiler or bump jacket on floor or pallet. Damage to boiler can result.

4. Check level.
   a. Shim legs, if necessary.
   b. Do not alter legs.

WARNING The boiler contains ceramic fiber and fiberglass materials. Use care when handling these materials per instructions on **page 58** of this manual. Failure to comply could result in severe personal injury.

Inspect Orifices and Burners

1. Remove front jacket door. Remove base access panel (See **Figure 35** item 4, **page 52**).
2. Check for correctly-sized manifold orifices. See **Table 3** for sizing. (The orifice size is stamped on the orifice spud barrel.)

DANGER Correctly-sized manifold orifices must be used. Failure to do so will result in severe personal injury, death or substantial property damage.

3. Level and straighten burners.

DANGER Burners must be properly seated in slots in burner rest with their openings facing up. Main burner orifices must inject down center of burner. Failure to properly seat burners will result in severe personal injury, death or substantial property damage.

4. Reinstall access panel.

CAUTION Do not operate boiler without access panel secured in place. Failure to comply could cause momentary flame rollout on ignition of main flame, resulting in possible fire or personal injury hazard.

Table 3 Manifold orifice sizing

Location	Boiler model number	Natural gas		Propane gas	
		0-2,000 feet	over 2,000 feet	0-2,000 feet	over 2,000 feet
U. S.	GWI-048s	#43	See Note 1.	#54	See Note 1.
	GWI-058	#40		#53	
	GWI-090	#40		1.55 mm	
	GWI-119	2.55 mm		1.60 mm	
	GWI-158/190	#38		1.65 mm	

Note 1: For elevations above 2,000 feet, contact your local Williamson-Thermoflo sales office for details.

Pressure Test

Perform Hydrostatic Pressure Test

Pressure test boiler **before** attaching water or gas piping or electrical supply (except as noted below).

Prepare Boiler for Test

1. Remove the shipping nipple (from GWI supply tapping) and remove the boiler relief valve. Temporarily plug the relief valve tapping with a ¾" NPT pipe plug.
2. Remove 1¼" nipple, reducing tee and drain valve from accessory bag. Install in boiler return connection as shown on in **Figure 37** item 3, **page 54** . Install circulator on either the return or supply.
3. Remove 1¼" nipple, 1¼" tee, bushing and pressure/temperature gauge from accessory bag. Pipe to boiler supply connection as shown in **Figure 37** item 2, **page 54**. (Use pipe dope sparingly.)
4. Connect a hose to boiler drain valve, the other end connected to a fresh water supply. Make sure hose can also be used to drain boiler after test.
5. Connect a nipple and shutoff valve to system supply connection on the 1¼" tee. This valve will be used to bleed air during the fill. (Valve and nipple are not included with boiler.)
6. Connect a nipple and shutoff valve to system return connection (at circulator flange if circulator installed on return). This valve will be used to bleed air during the fill. (Valve and nipple are not included with boiler.)

Fill and Pressure Test

1. Open the shutoff valves you installed on supply and return connections.
2. Slowly open boiler drain valve and fresh water supply to fill boiler with water.
3. When water flows from shutoff valves, close boiler drain valve.
4. Close shutoff valves.
5. Slowly reopen boiler drain valve until test pressure of not more than 45 psi is reached on the pressure/temperature gauge.
6. Test at no more than 45 psi for no more than 10 minutes.

WARNING Do not leave boiler unattended. A cold water fill could expand and cause excessive pressure, resulting in severe personal injury, death or substantial property damage.

7. Make sure constant gauge pressure has been maintained throughout test. Check for leaks. Repair if found.

WARNING Leaks must be repaired at once. Failure to do so can damage boiler, resulting in substantial property damage.

DANGER Do not use petroleum-based cleaning or sealing compounds in boiler system. Severe damage to boiler will occur, resulting in substantial property damage.

Drain and Remove Fittings

1. Disconnect fill water hose from water source.
2. Drain boiler at drain valve or out hose, whichever provides best access to drain. Remove hose after draining if used to drain boiler.
3. Remove nipples and valves unless they will remain for use in the system piping.
4. Remove plug from relief valve tapping. See **page 13** to replace relief valve.

3. Vent Installation

GWI Venting Options

The GWI boiler can be vented using one of the following methods:

WARNING Use only the vent materials and methods outlined in this manual. Use of any other materials or methods could result in vent failure or flue gas leakage, causing severe personal injury, death or substantial property damage.

Chimney Draft Venting

— Uses the natural draft provided by a vertical vent or chimney. When vented using chimney draft venting, GWI boilers are rated as Category I appliances (no pressure in vent and flue gas temperature hot enough to avoid excessive vent condensation). See following section for installation procedures.

Chimney draft installations use:

a. Vent connector (single or doublewall) sized to eliminate positive pressure in vent system. Diameter increases immediately at boiler. See **Figure 3, page 8** for connector sizing.

b. Double-wall metal vent (B-vent) or chimney with liner approved by the National Fuel Gas Code, ANSI Z223.1/NFPA 54 – latest edition.

Direct Exhaust — Vertical or Sidewall

— Vent pipe is pressurized and terminated vertically through the roof or through a side wall. When vented as direct exhaust, GWI boilers are rated as Category III appliance (positive pressure in the vent and flue gas temperature hot enough to avoid excessive vent condensation).

You must use only the vent materials listed in this manual. See **pages 8** through **12** for installation procedures.

Direct exhaust installations use:

a. Vent materials specified in this manual.

b. Vent termination through outside wall, roof or unused chimney. (Tight chimney areas will make vent joint construction very difficult.)

Chimney Draft Venting

DANGER Inspect existing chimney before installing boiler. Failure to clean or replace perforate pipe or lining will cause severe personal injury or death.

WARNING Vent sizing given in **Figure 3** is only a general guideline. The vent connector and chimney must be designed, sized and constructed in compliance with all applicable codes. Failure to correctly size and install the vent system could result in severe personal injury, death or substantial property damage.

NOTICE See **page 4** for additional requirements when chimney draft venting.

Figure 3 Chimney draft venting installation

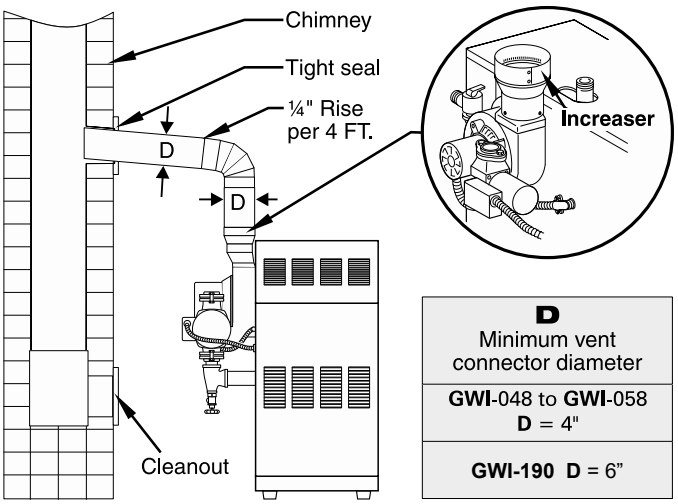

1. Use doublewall metal vent (B-vent) or chimney with liner as required by the National Fuel Gas Code, ANSI Z223.1/NFPA 54 – latest edition.
2. To prevent downdrafts, chimney should extend at least 3 feet above the highest point where it passes through a roof and at least 2 feet higher than any portion of a building within a horizontal distance of 10 feet.
3. To vent with another appliance, see National Fuel Gas Code, ANSI Z223.1/NFPA 54 – latest edition.
4. Do not connect breeching to any portion of a mechanical draft system that can operate under positive pressure.
5. Maintain minimum 2” clearance from combustible materials to vent pipe.
6. Do not use chimney with an open fireplace.
7. Make horizontal runs as short as possible. Long runs can cause condensation.
8. When longer runs are used, support pipe with appropriate hangers.
9. To prevent blockage, do not vent into bottom of chimney.
10. Vent pipe must not go beyond inside wall of chimney.
11. Vent passing through floors or ceilings must be firestopped.
12. See **Figure 3** to connect boiler to venting system.

3. Vent Installation (continued)

Direct Exhaust Venting

1. Select a vent pipe manufacturer from separate GWI Vent Component Supplement and obtain all vent components needed, based on boiler location and venting method.
2. You must use the vent starter (see below) made by the vent pipe manufacturer.

⚠WARNING Use only the vent starter of the same manufacturer as the vent components. Do not mix components from different systems. The vent system could fail, causing flue gas spillage, resulting in severe personal injury or death.

⚠WARNING Do not operate the boiler before verifying the integrity of the entire venting system. Failure to inspect flue gas leakage points prior to startup can cause combustion gas spillage into the building and result in severe personal injury or death.

3. Follow all applicable national, state or local codes when venting the GWI boiler.
4. Connect vent starter to blower housing outlet as shown below.
   a. Do not mix components from different vent manufacturers.
   b. Maintain minimum 2” clearance from combustible materials to vent pipe.
   c. Seal with high temperature sealant specified by vent pipe manufacturer, using ⅜” bead (not required for FasNSeal™).
   d. Tighten strap at band clamp screw until strap is snug around blower housing.

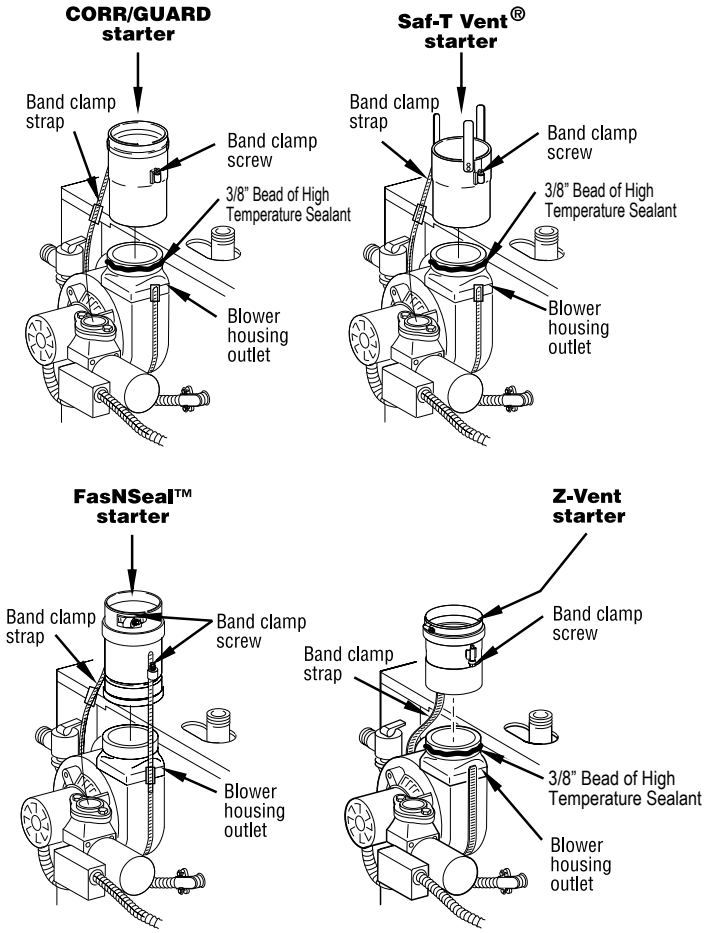

Obtain vent system components

1. The following special gas vent systems comply with UL-1738 and ULC-S636 standards and are certified by CSA as the only systems suitable for use with GWI boilers (all 3” diameter):
   - Heat-Fab, Inc. Saf-T Vent®
   - Metal-Fab, Inc. CORR/GUARD
   - Z-Flex®, Inc. Z-Vent
   - ProTech Systems FasNSeal™

Table 4 Vent Starters from approved manufacturers

Supplier/ Manufacturer	Description	Vent Starter Part Number
Saf-T Vent EZ Seal®	3" Vent Starter	93WMCGIS
CORR/GUARD	3" Vent Starter	3CGWLA
Z-Vent	3" Vent Starter	2SVEWMFA03
FasNSeal™	3" Vent Starter	FSA-WEIL-CGI3

⚠WARNING Use only the vent starter of the same manufacturer as the vent components. Do not mix components from different systems. The vent system could fail, causing flue gas spillage, resulting in severe personal injury or death.

2. Select vertical or sidewall venting depending on job requirements.
3. Refer to **Table 5** for maximum vent run lengths and number of elbows. Do not exceed data in **Table 5**.
4. All components, including the vent starter, must be of the same vent manufacturer. Do not mix components.

Table 5 Maximum vent length

Max.vent length (feet)	Total number of 90° elbows (Notes 1 & 2)					
	1	2	3	4	5	6
GWI-048 to GWI-158	55	48	41	34	27	20
GWI-190	35	28	21	14	7	--

Notes:
1. Do not include termination fitting when counting total number of elbows.
2. One (1) 90° elbow is equivalent to two (2) 45° elbows.

* (Minimum length for all applications is 2 feet equivalent with two (2) elbows.

3. Vent Installation (continued)

Direct Exhaust Venting (continued)

Vent Termination Location

WARNING Follow instructions on this page when determining vent location to avoid possibility of severe personal injury, death or substantial property damage.

1. Locate the boiler and vent penetration through the wall so all requirements on this page and in **Figure 4** and **Figure 5** will be met. Also follow vent manufacturer's instructions.
2. Gases will form white plume in winter. Plume could obstruct window view.
3. Prevailing winds could cause freezing of condensate and water/ice buildup on vent termination, building, plants or roof. Ice buildup on vent termination can cause boiler shutdown and building freeze-up.
4. Winds over 31 mph can cause nuisance boiler shutdown if boiler is sidewall vented. This could result in loss of heat to building, causing freeze-up.
5. Locate or guard vent termination to prevent condensate from damaging exterior surfaces.
6. Locate the vent termination well away from trees, shrubs, and decorative items.
7. Locate or guard vent to prevent accidental contact by people or pets.
8. Do not terminate vent in window well, stairwell, alcove, courtyard, or other recessed areas.
9. Do not wrap or insulate vent pipe or fittings.
10. Do not terminate vent above any door or window. Condensate can freeze, causing ice formations.
11. Do not connect:
    - Any other appliance to vent pipe.
    - Multiple boilers to a common vent pipe.
12. See Figures 4 and 5, showing that the vent must terminate:
    - at least 7 feet above public walkway.
    - 3 feet above any forced air intake within 10 feet.
    - more than 4 feet below or to side of all doors or windows.
    - more than 1 foot above grade or anticipated snow line.
13. Vent must also terminate:
    - at least 6 feet away from adjacent walls.
    - no closer than 5 feet below roof overhang.
    - minimum 4 feet (1.22 m) horizontally (and in no case above or below unless a 4 foot (1.22 m) horizontal distance is maintained) from electric meters, gas meters, regulators, relief valves, and other equipment.
14. Site conditions may dictate greater clearances.
15. Do not extend exposed vent pipe outside of building. Condensate could freeze and block vent pipe.
16. Ensure proper clearance above grade or snow line. Keep vents/air intake area clear of accumulating snow.

WARNING A gas vent extending through an exterior wall shall not terminate adjacent to the wall or below building extensions such as eaves, overhangs, balconies or decks. Failure to comply could result in severe personal injury, death or substantial property damage.

Figure 4 Maintain minimum clearances from public walkways and building air openings

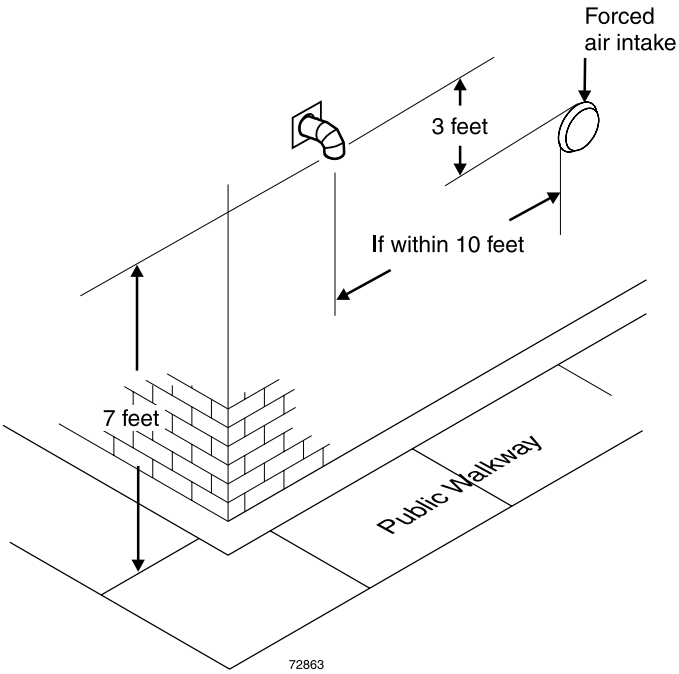

Figure 5 Maintain minimum clearances from doors, windows and snow line

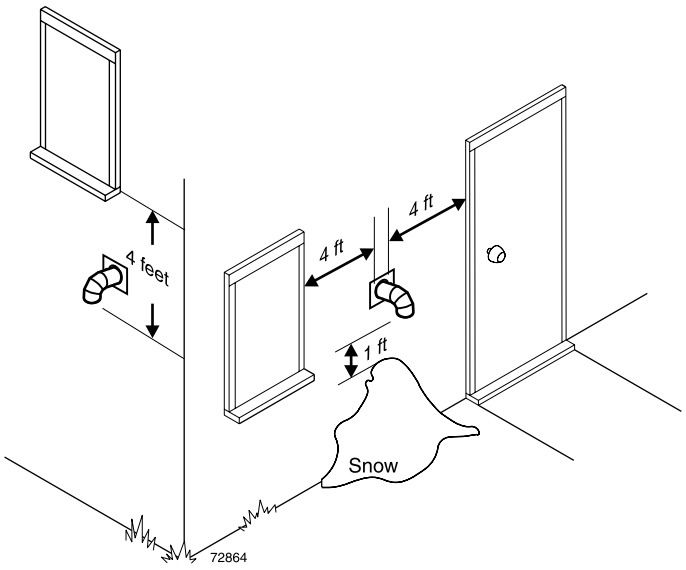

3. Vent Installation (continued)

Direct Exhaust Venting (continued)

Installing direct exhaust vent and termination

1. Do not mix types or manufacturers of vent materials.

WARNING Use only the vent starter of the same manufacturer as the vent components. Do not mix components from different systems. The vent system could fail, causing flue gas spillage, resulting in severe personal injury or death.

2. Clean all joints before sealing. See vent manufacturer's instructions for cleaning and sealing joints. Use their specified sealant. Do not use screws.
3. Install vent pipe with seams on top of vent horizontal runs. Follow requirements on page 10 for vent termination location.
4. Maintain minimum 2" clearance from combustible materials to vent pipe.
5. Vertical venting — See **Figure 6**. Follow vent manufacturer's instructions for venting through roof.
   - Vent pipe must extend through roof flashing, jacket or thimble.
   - Vent may pass through floor, inside wall or concealed space when installed according to vent manufacturer's instructions.

   Sidewall venting — See **Figure 7** and **Figure 8**. Vent must terminate at least one foot above anticipated snow line. Vent must be terminated only with:
   - Elbow or vertical tee with screen(s).
6. Do not seal vent pipe (slip connector for Saf-T Vent and CORR/GUARD) to inside or outside plate.
7. If passing through noncombustible wall, provide hole diameter large enough to insert the vent pipe (slip connector for Saf-T Vent and CORR/GUARD).
8. Install horizontal drain tee as close as possible to boiler, in first horizontal run. **See Figure 7.**
9. Do not exceed the maximum vent system length given in **Table 4, page 9** .

WARNING Condensate drain line — use only silicone tubing rated for at least 400 °F for the first 18" of condensate drain line, then other non-metallic tubing may be used. Using any other material could cause flue gas leakage, potentially resulting in severe personal injury, death or substantial property damage.

CAUTION On some installations, the condensate drain fitting may be omitted, provided:

- Vent manufacturer shows this option in their instructions.
- Vent is sloped toward termination as shown in dotted lines in **Figure 7**.
- The vent is installed per boiler manufacturer's and vent manufacturer's instructions.

Condensate drippage from such vents may accumulate on the ground below. Consider traffic in the area to avoid hazard due to ice accumulation.

Figure 6 Vertical direct exhaust installation

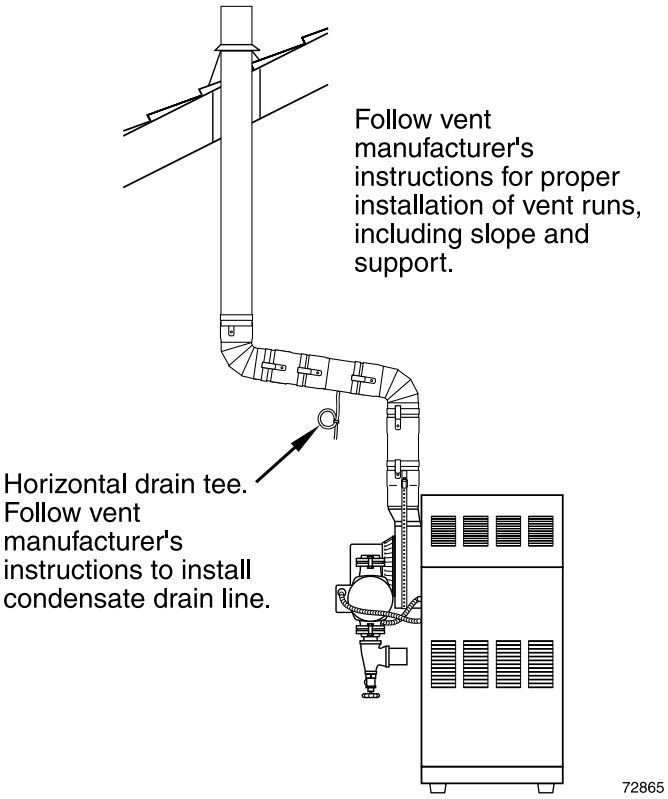

Figure 7 Direct exhaust through side wall

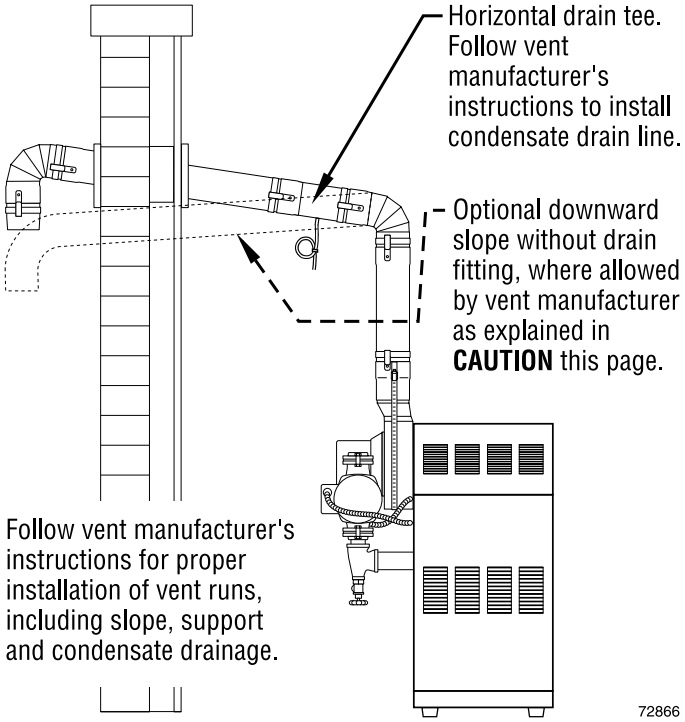

3. Vent Installation (continued)

Direct Exhaust Venting (continued)

Figure 8 Sidewall vent termination options and installation requirements

WARNING Using any termination other than one of those shown could cause nuisance outages and loss of heat, resulting in substantial property damage.

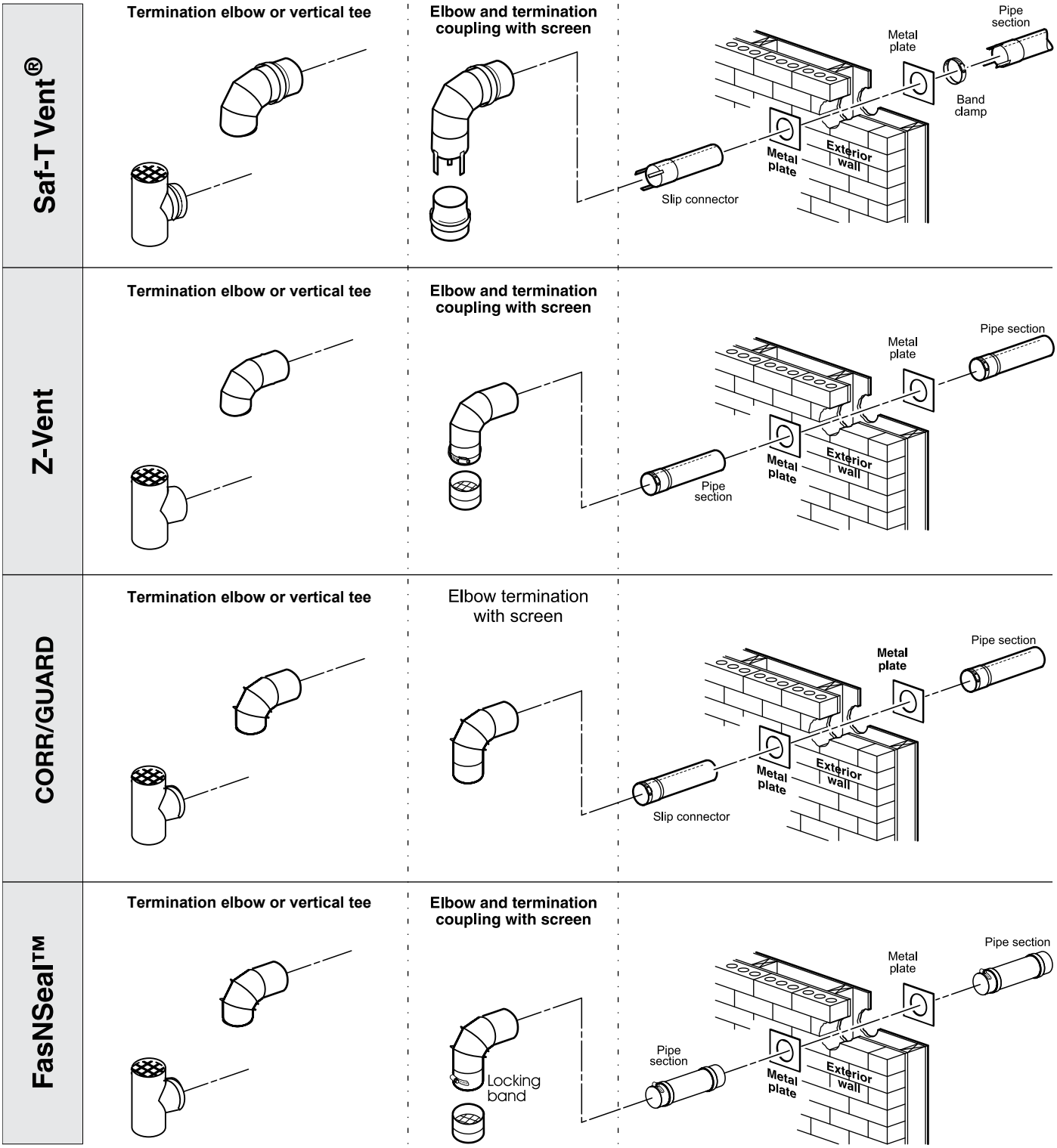

4. Install Water Piping

General

If installation is to comply with ASME requirements, an additional high temperature limit is needed. Install control in supply piping between boiler and isolation valve. Set second control to minimum 20 °F above setpoint of first control. Maximum allowable setpoint is 240 °F. See **page 31** and **page 33** for wiring.

A low water cutoff device is required when boiler is installed above radiation level or by certain state or local codes or insurance companies. Use low water cutoff designed for water installations. Electrode probe-type is recommended. Purchase and install in tee in supply piping above boiler.

Use backflow check valve in cold water supply if required by local codes.

Near-Boiler Piping

See **Figure 9** (diaphragm-type or bladder-type expansion tank) or **Figure 10** (closed-type expansion tank) on **page 14**, and **Table 6**, for near-boiler and single-zone systems designed for return water at least 130 °F.

See **page 13** and **page 16** for multiple-zone piping.

See **page 14** for boilers used with refrigeration systems.

LWCO Device

1. A low water cut-off device is shipped loose with the boiler. It should be installed, above the boiler, or by state or local codes or insurance companies by your installer or qualified technician.
2. See Near-boiler piping, Figures 9 and 10, page 14 for typical installation location of low water cut-off device.
3. The low water cut-off device includes its own harness, fittings and instructions for installing and connecting to your controls.

Isolation Valves

Isolation valves are recommended to enable servicing of the boiler's temperature sensor. Install as shown in appropriate piping diagram.

Relief Valve

Install relief valve vertically in ¾" NPT tapping on side of boiler. See the tag attached to the relief valve for manufacturer's instructions.

WARNING To avoid water damage or scalding due to valve operation, discharge line must be connected to relief valve outlet and run to a safe place of disposal. Terminate the discharge line to eliminate possibility of severe burns should the valve discharge.

- Discharge line must be as short as possible and be the same size as the valve discharge connection throughout its entire length.
- Discharge line must pitch downward from the valve and terminate at least 6" above the floor drain where any discharge will be clearly visible.
- The discharge line shall terminate plain, not threaded, with a material serviceable for temperatures of 375 °F or greater.
- Do not pipe the discharge to any place where freezing could occur.
- No shutoff valve shall be installed between the relief valve and boiler, or in the discharge line. Do not plug or place any obstruction in the discharge line.
- Failure to comply with the guidelines could result in failure of the relief valve to operate, resulting in possibility of severe personal injury, death or substantial property damage.
- Test the operation of the valve after filling and pressurizing system by lifting the lever. Make sure the valve discharges freely. If the valve fails to operate correctly, replace it with a new relief valve.

Table 6 Water pipe size (based on 20 °F rise)

Boiler model number	To system	From system
GWI-048	¾"	¾"
GWI-058, -095 & -127	1"	1"
GWI-158 & -190	1 ¼"	1 ¼"

Circulator

The circulator is shipped loose (wiring pre-attached to boiler) to allow you to locate it either in the return or supply piping, as desired. See **page 14** for a typical installation. Pipe the expansion tank to the suction side of the circulator whenever possible. Install an air separator in the supply piping. Connect the expansion tank to the air separator only if the separator is on the suction side of the circulator. Always install the system fill connection at the same point as the expansion tank connection to the system. **Figure 9** and **Figure 10** show typical near-boiler piping connections.

Expansion Tank

Diaphragm- or bladder-type expansion tank — Figure 9, page 14

1. Ensure expansion tank size will handle boiler and system water volume and temperature. Tank must be located in boiler return piping as close to boiler as possible, before inlet side of circulator. See tank manufacturer's instructions for details.
2. Install an automatic air vent as shown.

Closed-type expansion tank — Figure 10, page 14

3. Ensure expansion tank size will handle boiler and system water volume and temperature. See tank manufacturer's instructions for details.
4. Connect tank to ½" NPT tapping located behind supply outlet, using ½" NPT piping. Pitch any horizontal piping up towards tank 1 inch per 5 feet of piping.

CAUTION Undersized expansion tanks cause system water to be lost from relief valve and makeup water to be added through fill valve. Eventual section failure can result.

Water Piping — Multiple Zone Systems

Install system piping using either circulator zoning or zone valve zoning. Install expansion tank on suction side of system pump. Always connect fill line only at the expansion tank — never at another point in the system.

CAUTION **DO NOT connect directly from 3-wire zone valves to the T-T terminals on the boiler**. When using 3-wire zone valves, install an isolation relay. Connect the zone valve end switch wires to the isolation relay coil. Connect the isolation relay contact across the boiler T-T terminals. Failure to comply can result in damage to boiler components or cause unreliable operation, resulting in severe property damage.

4. Install Water Piping (continued)

Figure 9 Diaphragm- or bladder-type expansion tank: Piping to single-zone system using diaphragm-type or bladder-type expansion tank. See **Table 6**, page 13, for piping sizes.

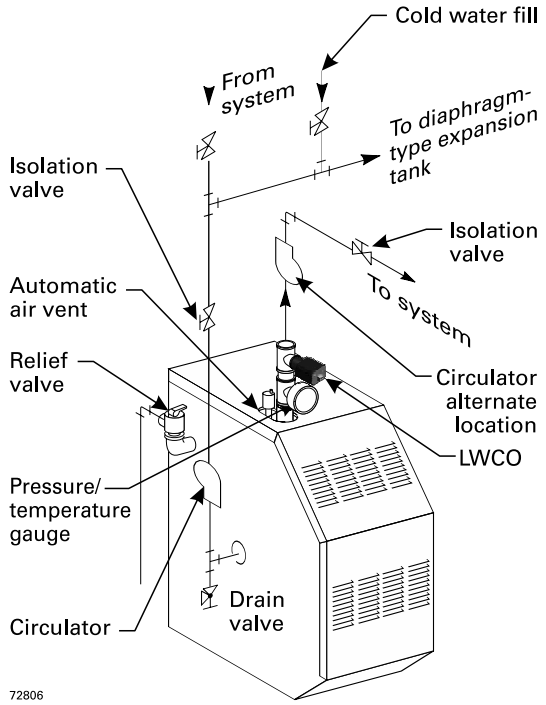

Figure 10 Closed-type expansion tank: Piping to single-zone system using closed-type expansion tank. See **Table 6**, page 13, for piping sizes.

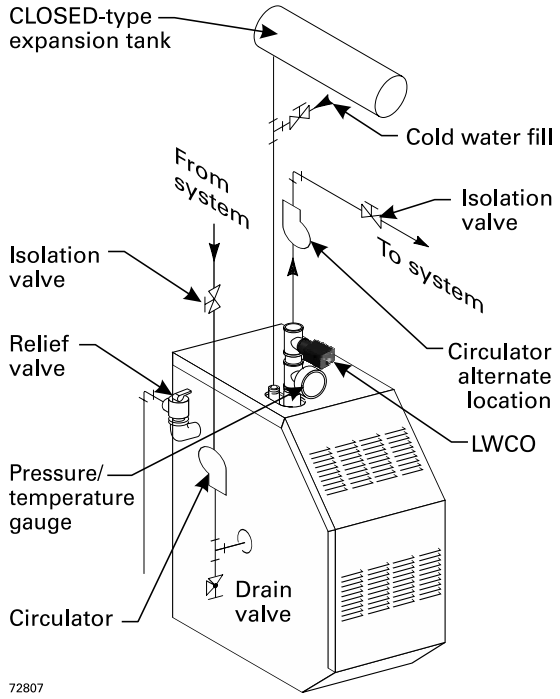

WARNING Use **Figure 9** or **Figure 10** only for systems designed for return water at least 130 °F. For systems with low return water temperature, such as converted gravity systems and radiant heating systems, install bypass piping (see **page 15**) to protect boiler against condensation. Failure to prevent low return water temperature to the boiler could cause corrosion of the boiler sections or burners, resulting in severe personal injury, death or substantial property damage.

WARNING If system includes radiant heating circuits, provide piping and controls to regulate the temperature supplying the radiant circuits. Failure to comply could result in substantial property damage.

WARNING Install boiler so that chilled medium is piped in parallel with heating boiler. Use appropriate valves to prevent chilled medium from entering boiler. Consult **AHRI Installation and Piping Guides.**

If boiler is connected to heating coils located in air handling units where they can be exposed to refrigerated air, use flow control valves or other automatic means to prevent gravity circulation during cooling cycle. Circulation of cold water through the boiler could result in damage to the heat exchanger, causing possible severe personal injury, death or substantial property damage.

Water Piping — Refrigeration Systems

Prevent Chilled Water from Entering Boiler

Install boiler so that chilled medium is piped in parallel with the heating boiler. Use appropriate valves to prevent chilled medium from entering boiler. See **Figure 11** for typical installation of balancing valve and check valve.

If boiler is connected to heating coils located in air handling units where they can be exposed to refrigerated air, use flow control valves or other automatic means to prevent gravity circulation during cooling cycle.

Figure 11 Piping refrigeration systems

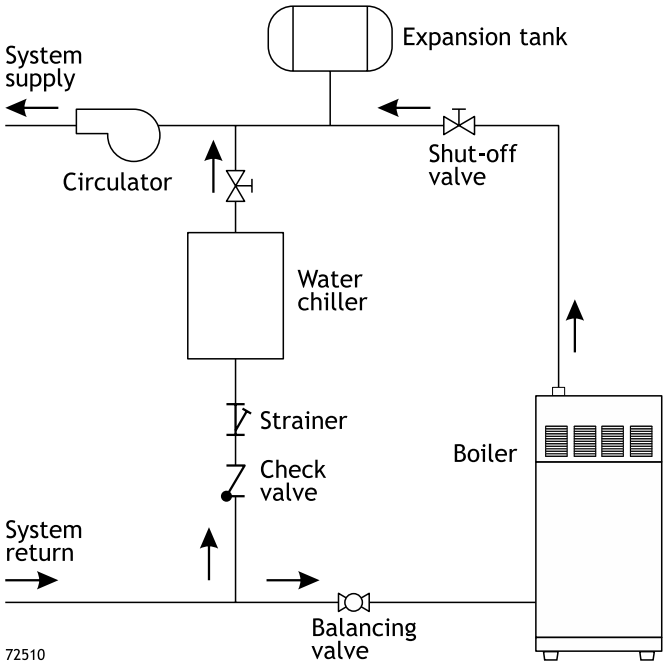

4. Install Water Piping (continued)

Near-Boiler Piping (continued)

Figure 12 System bypass piping in boiler loop with separate system circulator, using primary/secondary piping

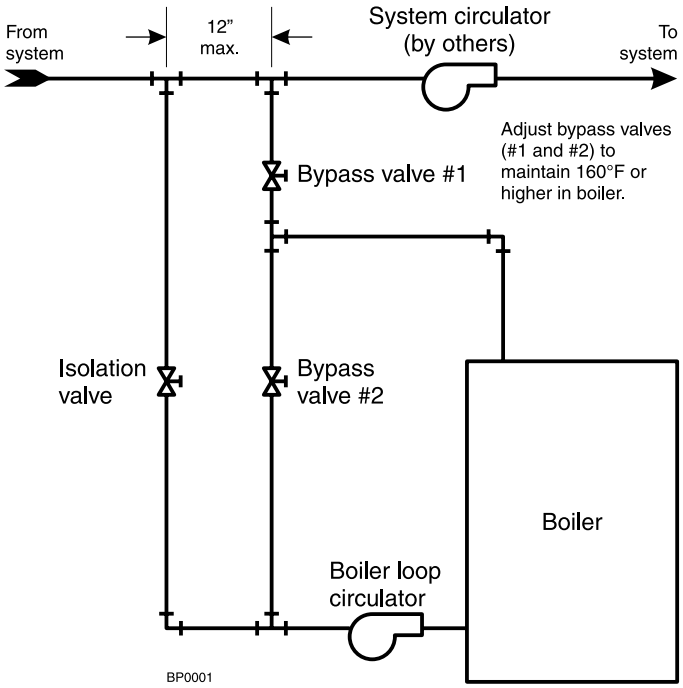

Figure 13 Boiler bypass piping — use only for high water content systems — DO NOT use for radiant panel systems

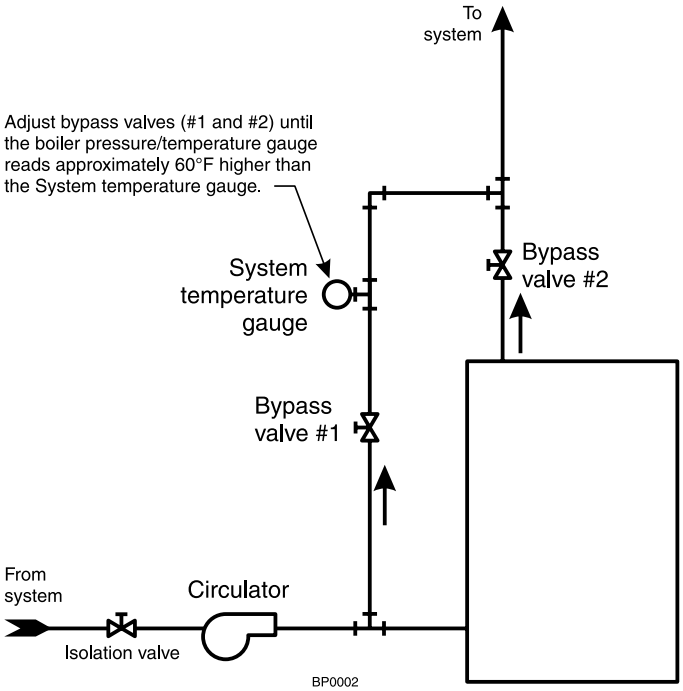

System bypass method

1. Apply bypass piping of **Figure 12** to high water content systems, radiant panel systems or any system that is likely to operate with low return water temperature for extended periods.
2. The bypass arrangement shown protects the boiler from damage caused by condensate corrosion due to low return water temperature and protects low temperature systems from too high a supply temperature.
3. Adjust the bypass valves as indicated below.

Adjust Bypass valves 1 and 2 as follows:

1. Start with valve 2 fully closed, valve 1 fully open.
2. Slowly open valve 2 while closing valve 1. Adjust the valves until the boiler pressure/temperature gauge reads 160 °F or higher. As you open the valves, pause long enough to allow temperatures to level off. It takes a while for the boiler water temperature to rise as the flow changes.
3. Bypass valve 2 allows hot boiler outlet water to blend with colder return water, raising the supply temperature to the boiler. Bypass valve 1 balances the pressure drop through valve 2.
4. The purpose of this piping is to raise the return water temperature to the boiler enough to prevent condensation of flue gases.

Boiler bypass method

1. Apply bypass piping of **Figure 13** to high water content systems, such as converted gravity systems.
2. The bypass arrangement shown protects the boiler from damage caused by condensate corrosion due to low return water temperature. This method does not provide protection from high temperature water being supplied to the system.
3. DO NOT apply this piping to radiant panel systems.
4. Adjust the bypass valves as indicated below.

Adjust Bypass valves 1 and 2 as follows:

1. Start with valve 1 fully closed, valve 2 fully open.
2. Slowly open valve 1 while closing valve 2. Adjust the valves until the boiler pressure/temperature gauge reads approximately 60 °F higher than the system temperature gauge. As you open the valves, pause long enough to allow temperatures to level off. It takes a while for the boiler water temperature to rise as the flow changes.
3. Bypass valve 1 controls system flow rate. Bypass valve 2 controls flow through the boiler.
4. The purpose of this piping is to cause a high enough temperature rise in the boiler that the average temperature will be warm enough to prevent condensation of flue gases.

⚠WARNING Install all components specified above and adjust valves as described to prevent low temperature in the boiler. Failure to prevent low water temperature in the boiler could cause corrosion of the boiler sections or burners, resulting in severe personal injury, death or substantial property damage.

5. Water Piping — Multiple Zones

Piping Multiple Zones

Follow instructions on **page 13** and **page 14** to install near-boiler or single-zone piping. (Also refer to Piping for radiant heating systems or converted gravity systems, below, if applicable.)

See **Figure 14** or **Figure 15, page 17**, to complete installation. **Figure 20, page 22**

Zoning with circulators (Figure 14) (return temp over 130°F)

1. Size each circulator to individual circuit requirements.
2. Do not install circulator on boiler (except for primary/secondary piping).
3. Install isolation (balancing) valves to adjust flow to distribute heat to all zones.
4. Install and wire a separate relay for each zone circulator.

Zoning with zone valves (Figure 15) (return temp over 130°F)

1. Install isolation (balancing) valves to adjust flow to distribute heat to all zones.
2. Provide a separate 24-volt transformer to power the zone valves. Size the transformer to handle the total rated load of all connected zone valves.

⚠CAUTION **DO NOT connect directly from 3-wire zone valves to the T-T terminals on the boiler.** When using 3-wire zone valves, install an isolation relay. Connect the zone valve end switch wires to the isolation relay coil. Connect the isolation relay contact across the boiler T-T terminals. Failure to comply can result in damage to boiler components or cause unreliable operation, resulting in severe property damage.

Piping for radiant heating systems or converted gravity systems

Converted gravity (or steam) systems

Whenever possible, use the primary/secondary piping shown in **Figure 16** or **Figure 17, page 19**. This piping design allows changing boiler flow rate without affecting primary circuit flow rate.

If **Figure 16** or **Figure 17, page 19** cannot be used, use the boiler-bypass piping shown in **Figure 18** or **Figure 19, page 21**. You can also use the piping shown in **Figure 20, page 22** (system-bypass), if the reduced flow rate in the heating system will not cause heat distribution problems.

⚠WARNING Failure to prevent low return water temperature to the boiler could cause corrosion of the boiler sections or burners, resulting in severe personal injury, death or substantial property damage.

Radiant heating systems

Preferably, use primary/secondary piping, as shown in **Figure 16** or **Figure 17, page 19**. Alternatively, use the method of either **Figure 18** or **Figure 19, page 21**. Do not use the piping of **Figure 20, page 22** (system-bypass), because this method does not control radiant system supply temperature.

If radiant system tubing has no oxygen barrier, a heat exchanger must be used.

⚠WARNING Radiant heating system piping should include a means of regulating the boiler return water temperature and the system supply temperature (such as provided by an injection pumping control). Boiler return water temperature will be adequately controlled using the methods shown in this manual provided the system supply temperature is relatively constant.

DO NOT apply the methods in this manual if the system is equipped with an **outdoor reset control**. Instead, provide controls and piping which can regulate the boiler return water temperature at no less than 130°F regardless of system supply temperature. Contact your Williamson-Thermoflo representative for suggested piping and control methods. Failure to prevent cold return water temperature to the boiler could cause corrosion damage to the sections or burners, resulting in possible severe personal injury, death or substantial property damage.

5. Water Piping — Multiple Zones (continued)

Figure 14 Zoning with circulators — return water 130°F or higher.

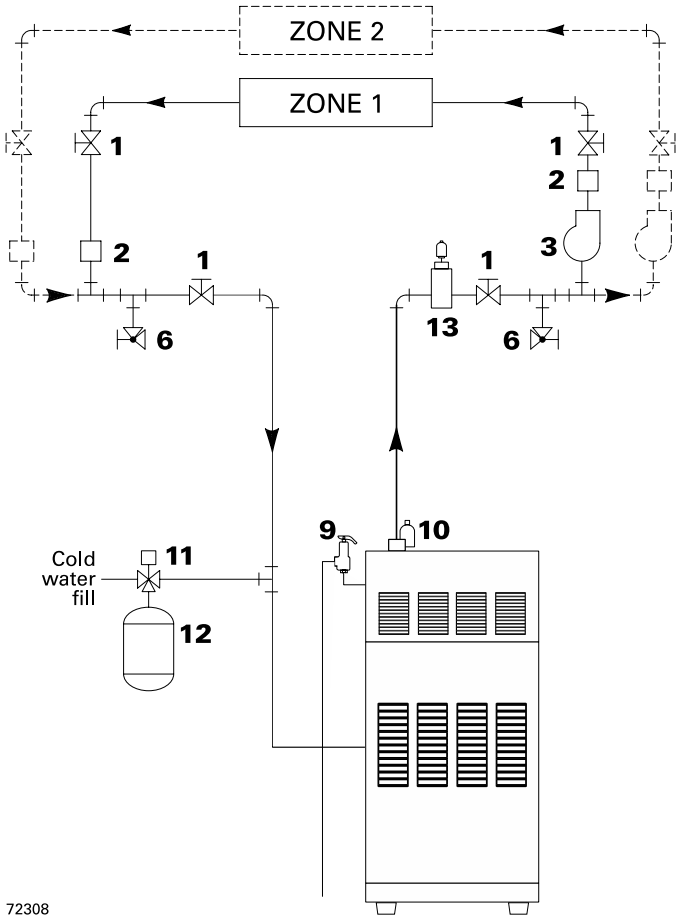

Figure 15 Zoning with zone valves — return water 130°F or higher.

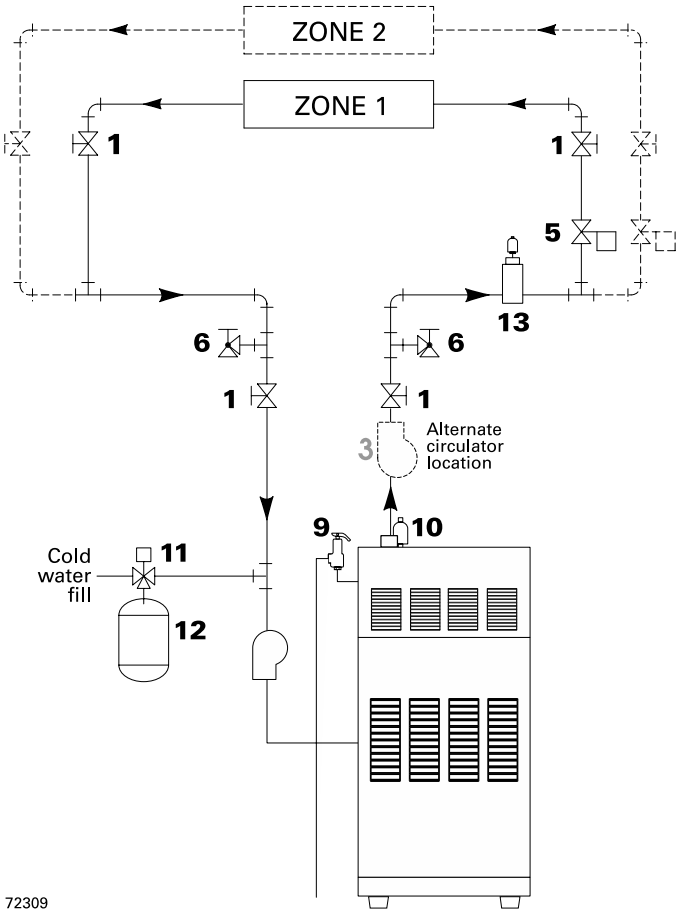

Legend:

- **1** Boiler isolation (balancing) valves
- **2** Flow/check valve
- **3** System or zone circulator
- **5** Zone valve
- **6** Drain valve
- **9** Relief valve
- **10** Automatic air vent (with diaphragm-type expansion tank), or connect to tank fitting (closed-type expansion tank). DO NOT use an automatic air vent when using closed-type expansion tank. It would allow air to leave the system, causing waterlogging of the expansion tank.
- **11** Fill valve
- **12** Diaphragm-type or bladder-type expansion tank, if used
  (For closed-type expansion tank, pipe from top of air separator to tank fitting as in **Figure 10, page 14**.)
- **13** Air separator and automatic vent, if used (Note that the fill valve must always be connected to the expansion tank, regardless of location of expansion tank circulator or air separator.

⚠WARNING For systems with possible low return-water temperature (such as converted gravity systems, radiant heating systems and heat pump systems), refer to the special piping suggestions of **Figure 16** through **Figure 20**, as applies. Failure to prevent sustained low return water temperature to the boiler could cause corrosion of the boiler sections, resulting in severe personal injury, death or substantial property damage.

5. Water Piping — Multiple Zones

Water Piping — Low Temperature Systems

Primary/secondary (preferred) Bypass piping method

Primary/secondary bypass piping is preferred because the flow rate and temperature drop in the heating circuit(s) is determined only by the heating circuit circulator(s). So adjustment of the bypass valves in the boiler circuit will not cause a change in the heating circuit rate and temperature distribution.

Figure 16 or **Figure 17, page 19**, show suggested bypass arrangements using primary/secondary bypass piping (preferred) for low temperature systems such as radiant heating systems or converted gravity systems. For alternatives, see pages 17 and 18.

The bypass valves (items **7a** and **7b**) provide mixing of hot boiler outlet water with cooler system return water — set to assure a minimum return water temperature (at least 130°F) to the boiler. Set the valves as explained below.

Temperature gauges

Gauge **4a** is suggested, but optional on any system.

Gauge **4b** is optional on converted gravity systems, but required on radiant heating systems — to display the water temperature being supplied to the radiant tubing.

Gauge **8** is required on all systems to assure the return water temperature is accurately set for a minimum of 130°F. If this gauge is not available however, adjust the valves such that the boiler-mounted temperature/pressure gauge reads at least 150°F when the system return water is cold (approximately 60°F water temperature).

Valve adjustment (Figure 16 and Figure 17 only)

1. Set the valves while the system is cool, setting for the coldest expected water temperature (usually 60°F since the system will often drop to room temperature between cycles).
2. Start with valve **7a** fully closed and **7b** fully open.
3. Gradually open valve **7a** while closing valve **7b** until the temperature at gauge **8** reads 130°F when gauge 4a reads 60°F.
4. Note that valve **7a** regulates the amount of hot water from the boiler supply which mixes with return water. Valve **7b** regulates the amount of system water flowing through the boiler secondary loop.

⚠WARNING

Failure to **prevent low return water temperature** to the boiler could cause corrosion of the boiler sections or burners, resulting in severe personal injury, death or substantial property damage.

Radiant heating system piping should include a means of **regulating the boiler return water temperature** and the **system supply temperature** (such as provided by an **injection pumping control**).

Boiler return water temperature will be adequately controlled using the methods shown in this manual provided the **system supply temperature** is **relatively constant.**

DO NOT apply the methods of this manual if the system is equipped with an **outdoor reset control.** Instead, **provide controls and piping** which can **regulate the boiler return water temperature** at **no less than 130°F** regardless of system supply temperature. Contact your Williamson-Thermoflo representative for suggested piping and control methods.

Failure to **prevent cold return water temperature** to the boiler could cause corrosion damage to the sections or burners, resulting in possible severe personal injury, death or substantial property damage.

5. Water Piping — Multiple Zones (continued)

Water Piping — Low Temperature Systems (continued)

Figure 16 Primary/secondary piping
Zoning with circulators

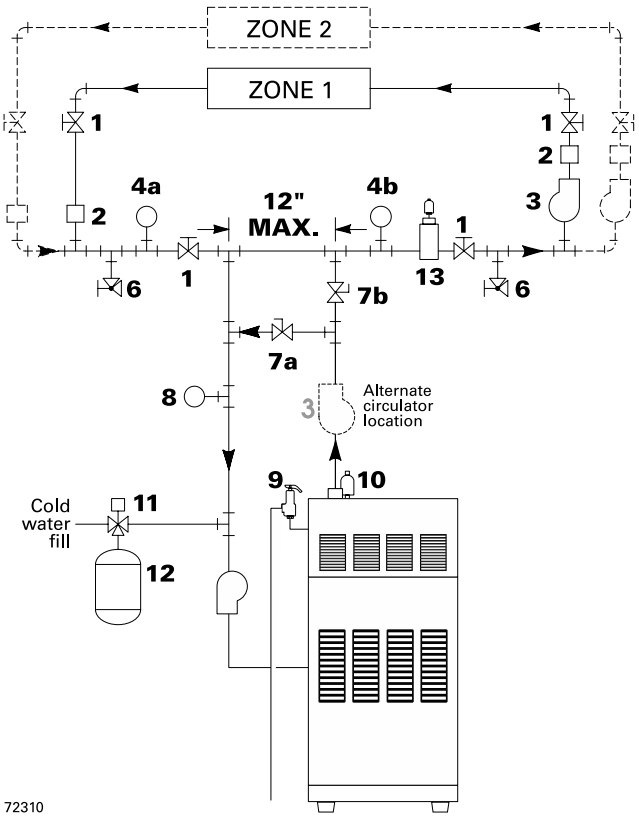

Figure 17 Primary/secondary piping
Zoning with zone valves

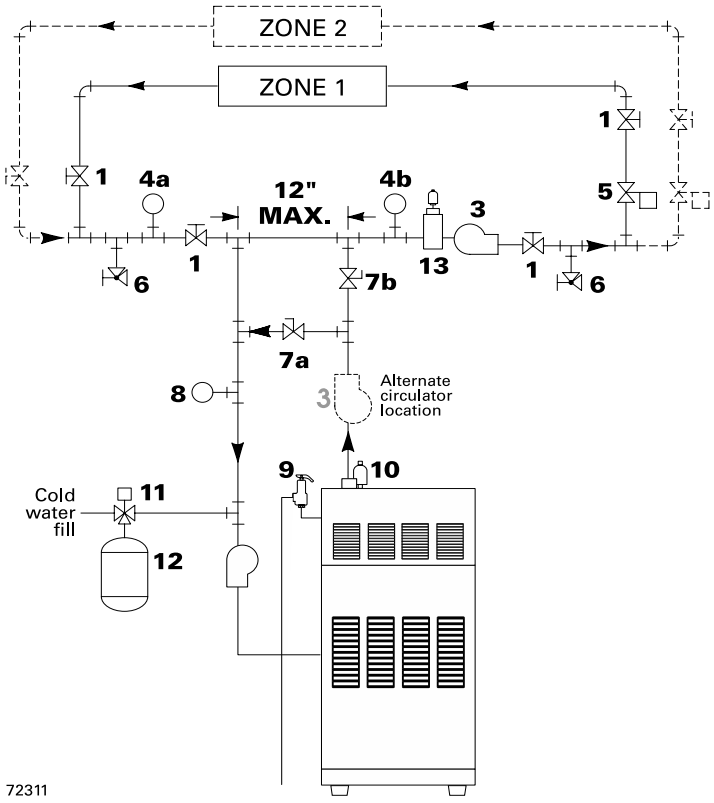

Legend:

1. Boiler isolation (balancing) valves
2. Flow/check valve
3. System or zone circulator (circulator should cycle with zone valve and switches, using circulator valve or zone control panel)
4. System temperature gauges
5. Zone valve
6. Drain valve
7. System temperature valves (see instructions to the left for adjusting valves)
8. Blend temperature gauge
9. Relief valve
10. Automatic air vent (with diaphragm-type expansion tank), or connect to tank fitting (closed-type expansion tank). **DO NOT** use an automatic air vent when using closed-type expansion tank. It would allow air to leave the system, causing waterlogging of the expansion tank.
11. Fill valve
12. Diaphragm-type or bladder-type expansion tank, if used
    (For closed-type expansion tank, pipe from top of air separator to tank fitting as in **Figure 10, page 14**.)
13. Air separator and automatic vent, if used (Note that the fill valve must always be connected to the expansion tank, regardless of location of expansion tank, circulator or air separator.)

5. Water Piping — Multiple Zones

Water Piping — Low Temperature Systems (continued)

BOILER-Bypass Piping Method

This piping method (**Figure 18** or **Figure 19, page 21**) is called a boiler-bypass because part of the circulator flow is bypassed around the boiler (through valve **7a**). This method reduces the flow rate throughout the boiler, in order to raise the average water temperature in the boiler enough to prevent flue gas condensation. Boiler-bypass piping is effective for some boilers — including the GWI — provided the flow rates are adjusted according to the instructions following.

Figures 18 or 19 are alternative piping suggestions for converted gravity (large water content or steam systems) or radiant heating system — for use when primary/secondary piping can't be applied. (**Figure 20, page 22**, is another alternative, using system bypass in place of boiler-bypass piping. **Figure 20** however, is not suitable for radiant heating applications because it does not protect the radiant system from possible high water temperature.)

Boiler-bypass piping keeps system flow rate as high as possible and temperature drop as low as possible, helping to equalize the building heat distribution.

Temperature Gauges

Gauge **4a** is optional if the bypass valves will be adjusted using cold (or room temperature) return water to the boiler. (When setting the valves without gauge **4a** installed — using cold or room temperature water — assume the return water temperature to be 60°F. Set the valves so gauge **8** reads at least 120°F.

Gauge **4b** is optional on converted gravity systems, but required on radiant heating systems — to display the water temperature being supplied to the radiant tubing.

Gauge **8** is required on all systems to assure reliable adjustment of the bypass valves. The boiler-mounted temperature/pressure gauge can be used if a separate temperature gauge is not installed.

Valve Adjustment

1. Start with valve **7a** fully closed and **7b** fully open.
2. Gradually open valve **7a** while closing valve **7b** until the temperature at gauge **8** reads 60 °F higher than gauge **4a**. A minimum 60°F temperature rise through the boiler assures a low enough flow rate and high enough average temperature to prevent condensation even with low system return water temperature.
3. Valve **7a** regulates the system flow rate, while valve **7b** regulates the boiler flow rate.
4. The boiler-mounted temperature/pressure gauge may be used in place of a separate gauge **8**.

⚠WARNING

Failure to **prevent low return water temperature** to the boiler could cause corrosion of the boiler sections or burners, resulting in severe personal injury, death or substantial property damage.

Radiant heating system piping should include a means of **regulating the boiler return water temperature** and the **system supply temperature** (such as provided by an **injection pumping control**).

Boiler return water temperature will be adequately controlled using the methods shown in this manual provided the **system supply temperature** is **relatively constant.**

DO NOT apply the methods of this manual if the system is equipped with an **outdoor reset control.** Instead, **provide controls and piping** which can **regulate the boiler return water temperature** at **no less than 130°F** regardless of system supply temperature. Contact your Williamson-Thermoflo representative for suggested piping and control methods.

Failure to **prevent cold return water temperature** to the boiler could cause corrosion damage to the sections or burners, resulting in possible severe personal injury, death or substantial property damage.

5. Water Piping — Multiple Zones (continued)

Water Piping — Low Temperature Systems (continued)

Figure 18 Boiler-bypass piping
Zoning with circulators (Alternative to primary/secondary piping Figures 12 and 13)

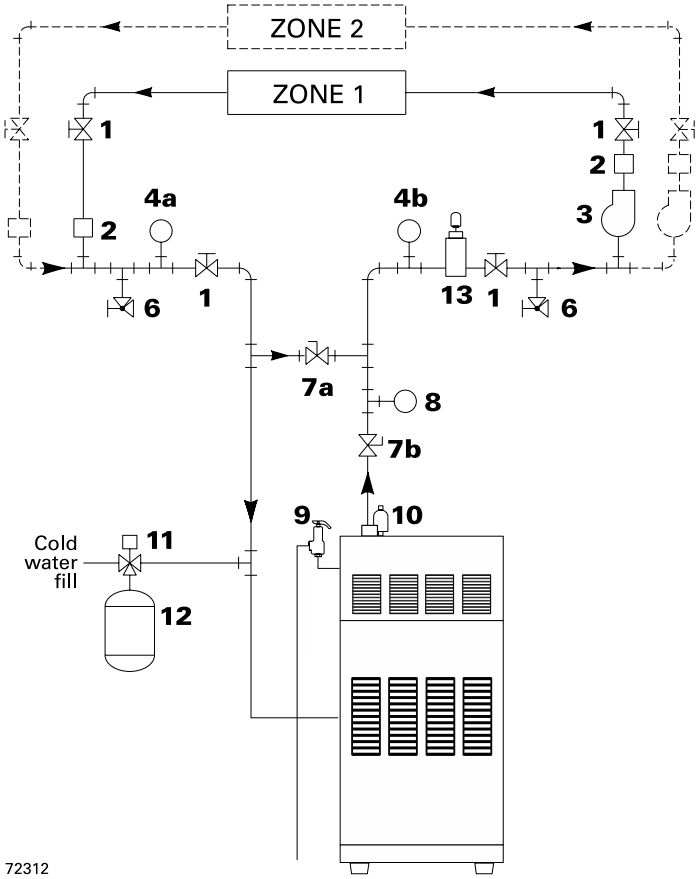

Figure 19 Boiler-bypass piping
Zoning with zone valves (Alternative to primary/secondary piping Figures 12 and 13)

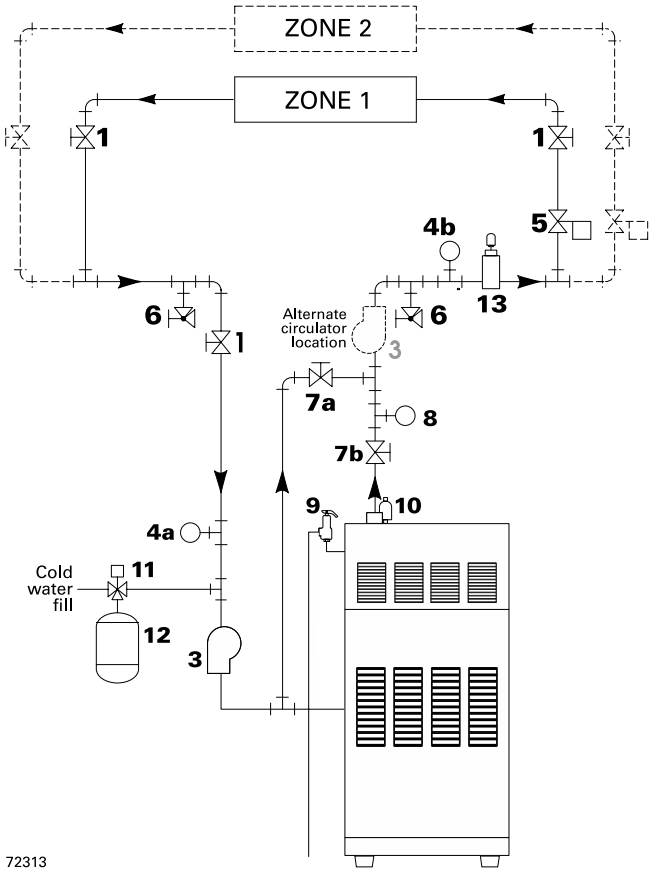

Legend:

1. Boiler isolation (balancing) valves
2. Flow/check valve
3. System or zone circulator
4. System temperature gauges
5. Zone valve
6. Drain valve
7. System temperature valves (see instructions to the left for adjusting valves)
8. Blend temperature gauge
9. Relief valve
10. Automatic air vent (with diaphragm-type expansion tank), or connect to tank fitting (closed-type expansion tank). **DO NOT** use an automatic air vent when using closed-type expansion tank. It would allow air to leave the system, causing waterlogging of the expansion tank.
11. Fill valve
12. Diaphragm-type or bladder-type expansion tank, if used (For closed-type expansion tank, pipe from top of air separator to tank fitting as in **Figure 10, page 14**.)
13. Air separator and automatic vent, if used (Note that the fill valve must always be connected to the expansion tank, regardless of location of expansion tank, circulator or air separator.)

5. Water Piping — Multiple Zones

Water Piping — Low Temperature Systems (continued)

SYSTEM-Bypass Piping Method

This piping method (**Figure 20**) is called a system-bypass because part of the circulator flow bypasses the system (through valve 7a). This bypassed hot water from the boiler outlet mixes with cooler system return water temperature in order to provide minimum 130°F return water to the boiler. Valve 7b will most often be full open, but may need to be slightly closed on some low pressure drop systems in order to cause enough flow through valve 7a.

Figure 20 is an alternative piping method that provides return water temperature control for boilers installed on converted gravity systems (large water content or steam systems).

DO NOT apply the piping of **Figure 20** on radiant heating systems. It provides no method of regulating the water temperature provided to the system and could result in excessive water temperature in the radiant tubing.

Figure 20 System-bypass piping — Zoning with zone valve or circulators, return water 130°F or higher — (Alternative to boiler-bypass piping **Figure 18** or **Figure 19, page 21**.)

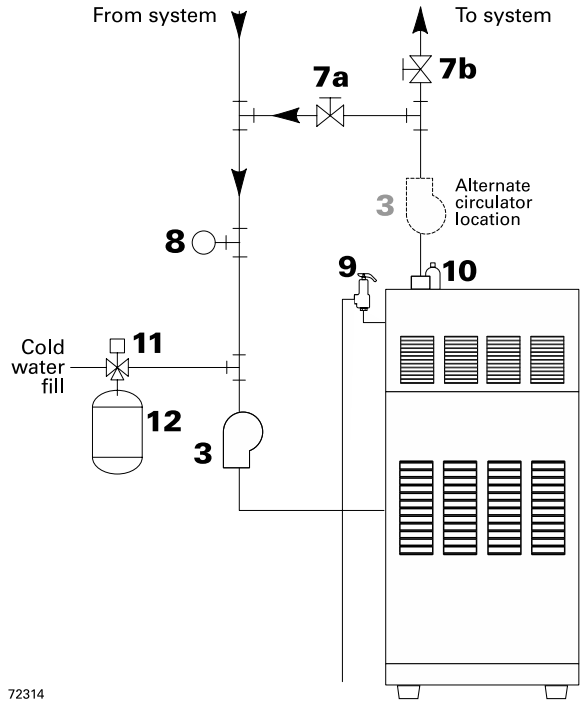

System-bypass piping as shown in **Figure 20** can be used with either zone valve or circulator zoning. When used with circulator zoning however, the boiler circulator (item 3), must be piped as shown. It cannot be used as one of the zoning circulators.

DO NOT apply system-bypass piping if the reduced flow in the system could cause poor heat distribution. That is, system-bypass piping reduces the flow in the system and increases the water temperature supplied to the system. This can cause increased heat from radiators at the beginning of the system and reduced heat from radiators near the end of the system.

Valve Adjustment

1. Start with valve **7a** fully closed and **7b** fully open.
2. Gradually open valve **7a** while closing valve **7b** until the temperature at gauge **8** reads at least 130°F at all times.
3. Valve **7a** regulates the amount of boiler supply water mixed with return water. Valve **7b** causes a pressure drop in the system needed to balance flow through valve **7a** and the system.
4. The valve adjustment should be done with the system at the coldest expected temperature (60°F for converted gravity systems or high mass radiant systems).

LEGEND:

3 System or zone circulator

7 System temperature valves (see instructions to the left for adjusting valves)

8 Blend temperature gauge

9 Relief valve

10 Automatic air vent (with diaphragm-type expansion tank), or connect to tank fitting (closed-type expansion tank). **DO NOT** use an automatic air vent when using closed-type expansion tank. It would allow air to leave the system, causing waterlogging of the expansion tank.

11 Fill valve

12 Diaphragm-type or bladder-type expansion tank, if used (For closed-type expansion tank, pipe from top of air separator to tank fitting as in **Figure 10, page 14**.)

⚠WARNING

Failure to **prevent low return water temperature** to the boiler could cause corrosion of the boiler sections or burners, resulting in severe personal injury, death or substantial property damage.

Radiant heating system piping should include a means of **regulating the boiler return water temperature** and the **system supply temperature** (such as provided by an **injection pumping control**).

Boiler return water temperature will be adequately controlled using the methods shown in this manual provided the **system supply temperature** is **relatively constant.**

DO NOT apply the methods of this manual if the system is equipped with an **outdoor reset control.** Instead, **provide controls and piping** which can **regulate the boiler return water temperature** at **no less than 130°F** regardless of system supply temperature. Contact your Williamson-Thermoflo representative for suggested piping and control methods.

Failure to **prevent cold return water temperature** to the boiler could cause corrosion damage to the sections or burners, resulting in possible severe personal injury, death or substantial property damage.

6. Install Gas Piping

Connecting Gas Supply Piping to Boiler

1. Remove jacket front panel and see **Figure 21** to pipe gas to boiler.
   a. Install drip leg at inlet of gas connection to boiler. Where local utility requires drip leg to be extended to the floor, use appropriate length of nipple between cap and tee.
   b. Install ground joint union for servicing, when required.
   c. Install manual shutoff valve in gas supply piping outside boiler jacket when required by local codes or utility requirements.
2. Support piping with hangers, not by boiler or its accessories.
3. Purge all air from gas supply piping.
4. Before placing boiler in operation, check boiler and its gas connection for leaks.
   a. Close manual main shutoff valve during any pressure testing at less than 13” w.c.
   b. Disconnect boiler and gas valve from gas supply piping during any pressure testing greater than 13” w.c.

WARNING Do not check for gas leaks with an open flame — Use bubble test. Failure to use bubble test or check for gas leaks can cause severe personal injury, death or substantial property damage.

5. Use pipe dope compatible with propane gases. Apply sparingly only to male threads of pipe joints so that pipe dope does not block gas flow.

WARNING Failure to apply pipe dope as described in this manual can result in severe personal injury, death or substantial property damage.

Table 7 Pipe capacity for 0.60 specific gravity natural gas

Gas pipe length (feet)	Capacity of pipe for pipe size of: (Capacity in cubic feet gas per hour)				
	½”	¾”	1”	1¼”	1½”
10	132	278	520	1050	1600
20	92	190	350	730	1100
30	73	152	285	590	860
40	63	130	245	500	760
50	56	115	215	440	670
75	45	93	175	360	545
100	38	79	150	305	460
150	31	64	120	250	380

Natural Gas:

1. See **Table 7** for pipe length and diameter. Base on rated boiler input (divide by 1,000 to obtain cubic feet per hour). **Table 7** is only for gas with specific gravity 0.60, with a pressure drop through the gas piping of 0.30” w.c. For additional gas pipe sizing information.
2. Inlet pressure required at gas valve inlet:
   - Maximum: 13” w.c.
   - Minimum: 5” w.c.
   - Manifold gas pressure:
     GWI-048, -058, -119, & -158: 3.5” w.c.
     GWI-90 & -190: High Fire, 3.5” w.c.; Low Fire, 0.9” w.c.
3. Install 100% lockup gas pressure regulator in supply line if inlet pressure exceeds 13” w.c. Adjust for 13” w.c. maximum.

Propane Gas:

1. Contact gas supplier to size pipes, tanks and 100% lockup gas pressure regulator.
2. Adjust propane supply regulator provided by gas supplier for 13” w.c. maximum pressure.
3. Inlet pressure required at gas valve inlet:
   - Maximum: 13” w.c.
   - Minimum: 11” w.c.
   - Manifold gas pressure:
     GWI-048, -058, -119, & -158: 10” w.c.
     GWI-90 & -190: High Fire, 10” w.c.; Low Fire, 2.6” w.c.

Figure 21 Gas supply piping

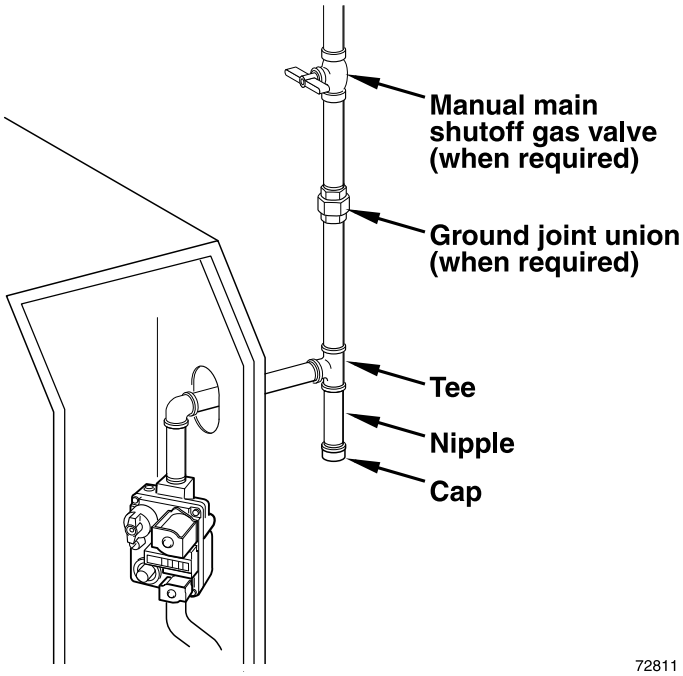

7. Field Wiring

WARNING For your safety, turn off electrical power supply at service entrance panel before making any electrical connections to avoid possible electric shock hazard. Failure to do so can cause severe personal injury or death.

NOTICE Wiring must be NEC Class 1 - latest edition
If rollout thermal fuse element wire as supplied with boiler must be replaced, type 200 °C wire or equivalent must be used. If other original wiring as supplied with boiler must be replaced, use only type 105 °C wire or equivalent.

Boiler must be electrically grounded as required by National Electrical Code ANSI/NFPA 70 - latest edition.

Electrical Installation Must Comply With:

National Electrical Code - latest edition and any other national, state, or local codes or regulations.

Wiring Connections

Boiler is shipped with controls completely wired. See wiring diagram on **page 31** and **page 32** for details. Circulator is shipped loose, but wiring harness is pre-attached to the boiler. Connect wires in circulator junction box.

Thermostat

1. Connect thermostat as shown on wiring diagram on boiler.
2. Install on inside wall away from influences of drafts, hot or cold water pipes, lighting fixtures, television, sun rays or fireplaces.
3. If thermostat has a heat anticipator, set heat anticipator in thermostat to match power requirements of equipment connected to it. If connected directly to boiler, see Wiring diagrams, **page 31** and **page 32**, for anticipator setting. For other devices, see manufacturer's specifications. Wiring diagram on boiler gives setting for control module and gas valve. Also see instructions with thermostat.

DHW *(if used)*

Connect DHW aquastat as shown in wiring below. Economy function isn't utilized with DHW input.

R & C Connections *(if used)*

24 VAC leads should be used for power stealing thermostats only!

Junction Box (Furnished)

1. Connect 120 VAC power wiring (**Figure 22**).
2. Fused disconnect or service switch (15 amp. recommended) may be mounted on this box. For those installations with local codes which prohibit installation of fused disconnect or service switch on boiler, install a 2 x 4 cover plate on the boiler junction box and mount the service switch remotely as required by the code.

Wiring Multiple Zones

See zone valve manufacturer's literature for wiring and application.

A separate transformer is required to power zone valves. Zoning with circulators requires a relay for each circulator.

CAUTION **DO NOT connect directly from 3-wire zone valves to the T-T terminals on the boiler.** When using 3-wire zone valves, install an isolation relay. Connect the zone valve end switch wires to the isolation relay coil. Connect the isolation relay contact across the boiler T-T terminals. Failure to comply can result in damage to boiler components or cause unreliable operation, resulting in severe property damage.

Figure 22 Field wiring connections — service switch, DHW (if used) and thermostat (or end switch) provided by installer.

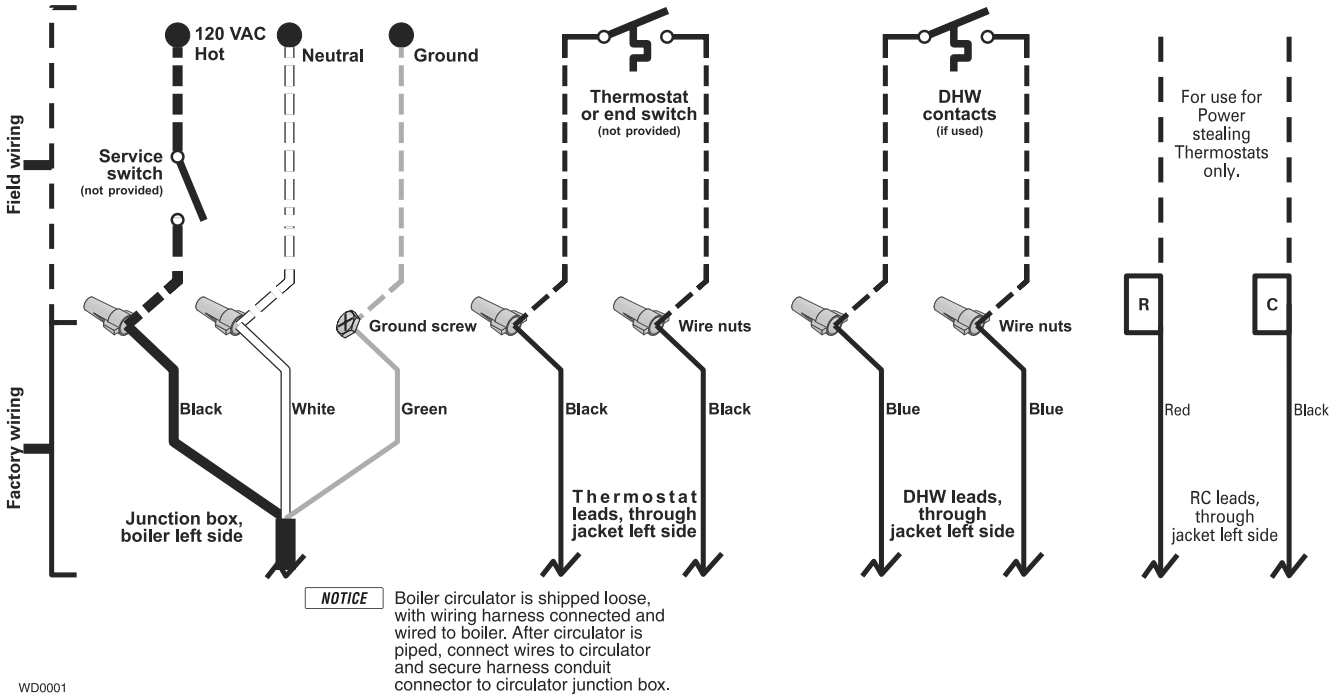

8. Start-Up

Preparation

Check for Gas Leaks

WARNING Before starting the boiler, and during initial operation, smell near the floor and around the boiler for gas odorant or any unusual odor. Do not proceed with start-up if there is any indication of a gas leak. Repair any leak at once.

WARNING Propane boilers only — Your propane supplier mixes an odorant with the propane to make its presence detectable. In some instances, the odorant can fade and the gas may no longer have an odor.

- Propane gas can accumulate at floor level. Smell near the floor for the gas odorant or any unusual odor. If you suspect a leak, do not attempt to light the pilot.
- Use caution when attempting to light the propane pilot. This should be done by a qualified service technician, particularly if pilot outages are common.
- Periodically check the odorant level of your gas.
- Inspect boiler and system at least yearly to make sure all gas piping is leak-tight.
- Consult your propane supplier regarding installation of a gas leak detector. There are some products on the market intended for this purpose. Your supplier may be able to suggest an appropriate device.

Determine if Water Treatment is Needed

DANGER Do not use petroleum-based cleaning or sealing compounds in boiler system. Severe damage to boiler will occur, resulting in substantial property damage.

WARNING Eliminate all system leaks. Continual fresh makeup water will reduce boiler life. Minerals can build up in sections, reducing heat transfer, overheating cast iron, and causing section failure.

Clean System to Remove Sediment

NOTICE

1. You must thoroughly flush the system (without boiler connected) to remove sediment. Sediment can affect chemical treatment of the system and can damage system components.
2. For zoned systems, flush each zone separately through a purge valve. (If purge valves and isolation valves are not already installed, install them to properly clean the system.)
3. Flush system until water runs clean and you are sure piping is free of sediment.

Verify Water Chemistry

Consult local water treatment companies for unusually hard water areas (above 7 grains hardness) or low pH water conditions (below 7.0). Boiler water pH of 7.0 to 8.5 is recommended.

Freeze Protection (when used)

Use antifreeze made especially for hydronic systems. Inhibited propylene glycol is recommended.

WARNING Do not use ethylene glycol, automotive or undiluted antifreeze. Severe personal injury or death can result.

1. Determine antifreeze quantity according to system water content. Boiler water content is listed on **page 57**. Remember to include expansion tank water content.
2. Follow antifreeze manufacturer's instructions.
3. A 50% solution of propylene glycol/water provides maximum protection to about -30 °F.
4. Local codes may require back flow preventer or actual disconnect from city water supply.
5. When using antifreeze in a system with automatic fill, install a water meter to monitor water makeup. Glycol will leak before the water begins to leak, causing glycol level to drop. Added water will dilute the antifreeze, reducing the freeze protection level.

Fill the System with Water

1. Close manual and automatic air vents and boiler drain cock.
2. Fill to correct system pressure. Correct pressure will vary with each application. Typical cold water fill pressure for a residential system is 12 psi.
3. Purge air from system:
   a. Connect a hose to purge valve or valves, if installed. Route hose to an area where water can drain and be seen.
   b. Close the boiler or system isolation valve between the purge valve and fill connection to the system.
   c. Close zone isolation valves.
   d. Open quick-fill valve on cold water makeup line.
   e. Open purge valve.
   f. One zone at a time, open the isolation valves. Allow water to run through the zone, pushing out the air. Run until no noticeable air flow is present. Close the zone isolation valves and proceed with the next zone. Follow this procedure until all zones are purged.
   g. Close the quick-fill water valve and purge valve and remove the hose. Open all isolation valves. Watch that system pressure rises to correct cold-fill pressure.
   h. After the system has operated for a while, eliminate any residual air by using the manual air vents located throughout the system.
   i. If purge valves are not installed in system, open manual air vents in system one at a time, beginning with lowest floor. Close vent when water squirts out. Repeat with remaining vents.
4. Open automatic air vent (diaphragm-type or bladder-type expansion tank systems only) one turn.
5. Open other vents:
   a. Starting on the lowest floor, open air vents one at a time until water squirts out.
   b. Repeat with remaining vents.
6. Refill to correct pressure.

Inspect System Water Piping

After filling the boiler and system with water, inspect all piping throughout the system for leaks. If found, repair immediately. Repeat this inspection after the boiler has been started and the system has heated up.

WARNING Leaks must be repaired at once. Failure to do so can damage the boiler, resulting in substantial property damage.

DANGER Do not use petroleum-based cleaning or sealing compounds in boiler system. Severe damage to boiler will occur, resulting in substantial property damage.

Inspect Base Insulation

Check to make sure insulation is secure against all four sides of the base. If insulation is damaged or displaced, do not operate boiler. Replace or reposition insulation.

WARNING Failure to replace damaged insulation or reposition insulation can result in a fire hazard, causing severe personal injury, death or substantial property damage.

WARNING The boiler contains ceramic fiber and fiberglass materials. Use care when handling these materials per instructions on **page 58** of this manual. Failure to comply could result in severe personal injury.

8. Start-Up (continued)

Operate Boiler

WARNING DO NOT proceed with boiler operation unless boiler and system have been filled with water and all instructions and procedures of previous manual sections have been completed. Failure to do so could result in severe personal injury, death or substantial property damage. Before starting the boiler . . .

- Read manual **Sections 10 and 11** and the **"Operating Instructions" on page 35**.
- Verify the boiler and system are full of water.
- Verify the Start-up "Preparation" procedures of this section have been completed.

Adjust Boiler Control Settings

BOILER OPERATING TEMPERATURE

With power turned on, control module receives a signal from the temperature sensor and displays boiler temperature. The control knob labeled **BOILER TEMP** is used to adjust the operating temperature setpoint, turning clockwise to increase temperature setting and counterclockwise to decrease. When the knob is turned to adjust temperature the display will brighten to indicate adjustment mode. After temperature is set to desired value, display will dim after approximately 5 seconds to indicate measurement mode.

ADJUST BOILER OPERATING TEMPERATURE TO DESIRED SETPOINT

BOILER ECONOMY SETTING

To comply with Department of Energy regulations, the control module circulates available hot water before turning on the boiler to attempt to satisfy a call for heat. While attempting to satisfy the heat demand, the control module also monitors the boiler temperature changes via the temperature sensor and determines whether or not the available hot water will satisfy the demand, adjusting the time delay to turn on the boiler until it determines that additional heat will be needed. The knob labeled ECONOMY ADJUST provides an adjustment between maximize (MAX) and minimize (MIN) time delay. The maximum (MAX) adjustment position should be used to maximize energy savings. Turning the knob counterclockwise decreases the delay time and should only be used in the event that the heated space becomes uncomfortable.

ADJUST ECONOMY TO DESIRED POSITION (MAX IS THE PREFERRED SETTING)

IMPORTANT

In accordance with Section 325 (f) (3) of the Energy Policy and Conservation Act, this boiler is equipped with a feature that saves energy by reducing the boiler water temperature as the heating load decreases. This feature is equipped with an override which is provided primarily to permit the use of an external energy management system that serves the same function.

THIS OVERRIDE MUST NOT BE USED UNLESS AT LEAST ONE OF THE FOLLOWING CONDITIONS IS TRUE:

- An external energy management system is installed that reduces the boiler water temperature as the heating load decreases.
- This boiler is part of a modular or multiple boiler system having a total input of 300,000 BTU/hr or greater.
- This boiler is equipped with a tankless coil.

Start the Boiler

Follow the "Operating instructions", **page 35**.

If boiler fails to start, see "If boiler doesn't start . . . Check for:" on this page.

Check System and Boiler

WARNING Eliminate all system leaks. Continual fresh makeup water will reduce boiler life. Minerals can build up in sections, reducing heat transfer, overheating cast iron, and causing section failure.

WARNING If you discover evidence of any gas leak, shut down the boiler at once. Find the leak source with bubble test and repair immediately. Do not start boiler again until corrected. Failure to comply could result in severe personal injury, death or substantial property damage.

DANGER Do not use petroleum-based cleaning or sealing compounds in boiler system. Severe damage to boiler will occur, resulting in substantial property damage.

1. Check system piping for leaks. If found, shut down boiler and repair immediately.
2. Vent air from system using manual vents. Air in the system will interfere with circulation and cause heat distribution problems and noise.
3. Inspect vent system thoroughly for signs of deterioration from corrosion, physical damage or sagging. Verify that masonry chimney liners are in good condition, with no obstructions, and there are no openings into the chimney.
4. Check around the boiler for gas odor following the procedure of **page 23** of this manual.
5. Verify operation using procedures below. Perform "Checkout procedure" on **pages 27** and **page 28** and fill in the "Installation and service certificate".

If Boiler Doesn't Start . . . Check for:

1. Loose connections, blown fuse or service switch off?
2. High limit switch set below boiler water temperature?
3. Thermostat set below room temperature?
4. Gas not turned on at meter or boiler?
5. Incoming gas pressure less than:
   5" w.c. for natural gas? 11" w.c. for propane gas?
6. If none of the above corrects the problem, see "Troubleshooting", **page 40** of this manual.

8. Start-Up (continued)

Verify Operation

Check Burner Flame — Pilot Burner

Proper pilot flame (see Figure 23):

1. Blue flame.
2. Inner cone engulfing pilot flame sensor.
3. Pilot flame sensor glowing cherry red.

Improper pilot flame:

1. Overfired — Large flame lifting or blowing past pilot flame sensor.
2. Underfired — Small flame. Inner cone not engulfing pilot flame sensor.
3. Lack of primary air — Yellow flame tip.

Figure 23 Typical pilot burner flame

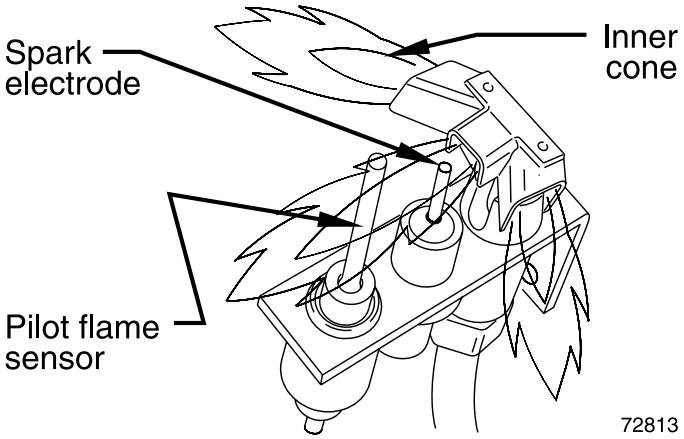

4. Incorrectly heated pilot flame sensor.

Check Burner Flames — Main Burner

Proper main burner flame (see Figure 24):

1. Yellow-orange streaks may appear (caused by dust).

Improper main burner flame:

1. Overfired — Large flames.
2. Underfired — Small flames.
3. Lack of primary air — Yellow tipping on flames (sooting will occur).

Figure 24 Typical main burner flame

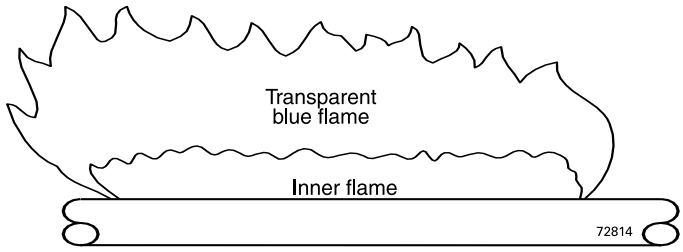

9. Checkout Procedure

- ☐ Boiler and heat distribution units filled with water?
- ☐ Automatic air vent, if used, open one full turn?
- ☐ Air purged from system?
- ☐ Air purged from gas piping? Piping checked for leaks?
- ☐ Correctly-sized manifold orifices installed? See **Table 3, page 7**, to check size and fuel type.

⚠ DANGER Correctly sized manifold orifices must be used. Failure to do so will cause severe personal injury, death or substantial property damage.

- ☐ Followed "Operating instructions" on boiler or in manual **page 35**, for proper start-up?
- ☐ Proper burner flame observed? See "Verify operation", manual Section 8.
- ☐ Test temperature limit — While burners are operating, turn Boiler Temp adjustment knob counterclockwise until display reading is below actual boiler water temperature. Burners should go off while circulator continues to operate. Turn Boiler Temp adjustment knob clockwise until display reading is above boiler water temperature and ignition sequence should resume.
- ☐ Test additional field-installed controls — If boiler has a low water cutoff, additional high limit or other controls, test for operation as outlined by manufacturer. Burners should be operating and should go off when controls are tested. When controls are restored, burners should reignite.
- ☐ Test ignition system safety device:
  - a. Connect manometer to outlet side of gas valve. Start boiler, allowing for normal start-up cycle to occur and main burners to ignite. With main burners on, manually shut off gas supply at manual main shutoff gas valve. Burners should go off. Open manual main shutoff gas valve. Manometer should confirm there is no gas flow. Pilot will relight, flame sensing element will sense pilot flame and main burners reignite.
- ☐ Set limit control(s) to system temperature requirements. Adjust balancing valves and controls to provide design temperature to system.
- ☐ Set Economy mode, fully clockwise.
- ☐ For multiple zones, adjust flow so it is about the same in each zone.
- ☐ Verify thermostat heat anticipator (if available) set properly? See wiring diagram label on boiler or in manual, **pages 31** and **page 32**.
- ☐ Cycle boiler with thermostat — Raise to highest setting and verify boiler goes through normal start-up cycle. Lower to lowest setting and verify boiler goes off.
- ☐ Cycle DHW Aquastat if used.
- ☐ Measure natural gas input:
  - a. Operate boiler 10 minutes.
  - b. Turn off other appliances.
  - c. At natural gas meter, measure time (in seconds) required to use one cubic foot of gas.
  - d. Calculate gas input:

$$\frac{3600 \times 1000}{\text{number of seconds from step } \mathbf{c}} = \text{Btuh}$$

  - e. Btuh calculated should approximate input rating on boiler rating label.

9. Checkout Procedure (continued)

☐ Check manifold gas pressure by connecting manometer to downstream test tapping on main gas valve.

a. **GWI-048, -058, -119, & -158 manifold pressure:**
Natural Gas: 3.5” w.c.
Propane: 10” w.c.

b. **GWI-90 & -190 manifold pressure:**
Natural Gas: High Fire, 3.5” w.c.; Low Fire, 0.9” w.c.
Propane: High Fire, 10” w.c.; Low Fire, 2.6” w.c.

☐ Observe several operating cycles for proper operation.

☐ Set room thermostat to desired room temperature.

☐ Fill in “Installation and service certificate” below?

☐ Review all instructions shipped with this boiler with owner or maintenance person. Return instructions to envelope and give to owner or place in pocket inside front panel in boiler.

Installation and Service Certificate

Boiler Model _____ **/ Series** _____ **Date installed** _____

Consumer Protection (CP) Number _____ **Btu Input** _____

CERTIFIED THAT:

- ❑ Installation instructions have been followed.
- ❑ Check-out sequence has been performed.
- ❑ Information on next two pages is certified to be correct.
- ❑ Information received and left with owner/maintenance person.

Installer _____ _____

_____ (Company) _____ (Address)

_____ (Phone) _____ (Installer’s Signature)

10. Department of Energy – Compliance

This boiler is equipped with a control system that automatically adjusts a time delay period to turn on the boiler during a call for heat. This is accomplished by circulating available hot water in the system while measuring water boiler water temperature changes. The control calculates a suitable delay based on temperature measurements and turns the boiler on only after it determines that the demand for heat cannot be satisfied with the available hot water.

Due to the wide variety of controls used in boiler installations, this control is also equipped with an adjustment for the calculated time delay period (ECONOMY ADJUST). In the MIN position, the time delay is zero and the IMPORTANT notice below must be observed:

IMPORTANT

In accordance with Section 325 (f) (3) of the Energy Policy and Conservation Act, this boiler is equipped with a feature that saves energy by reducing the boiler water temperature as the heating load decreases. This feature is equipped with an override which is provided primarily to permit the use of an external energy management system that serves the same function.

THIS OVERRIDE MUST NOT BE USED UNLESS AT LEAST ONE OF THE FOLLOWING CONDITIONS IS TRUE:

- An external energy management system is installed that reduces the boiler water temperature as the heating load decreases.
- This boiler is part of a modular or multiple boiler system having a total input of 300,000 BTU/hr or greater.
- This boiler is equipped with a tankless coil.

11. Sequence of Operation

⚠WARNING Follow all procedures given in this manual and "Operating Instructions" when operating the boiler. Failure to do so could result in severe personal injury, death or substantial property damage.

1. See **page 35** (or boiler "Operating Instructions" label) for "Operating Instructions."
2. Raise room thermostat to call for heat.
   a. While attempting to satisfy the heat demand, the control module monitors the boiler temperature changes via the temperature sensor and determines whether or not the available hot water will satisfy the demand, only running the circulator. If additional heat is needed, the sequence continues. When DHW (if used) calls for heat, sequence above is bypassed.
3. Blower and circulator energize. After pressure switch proves airflow, ignition control starts a 30-second prepurge.
4. Control module sparks the pilot and opens pilot valve in main gas valve.
   a. If pilot does not light within 15 seconds, pilot valve is closed and spark generator is turned off. Control module initiates a 15-second postpurge, then starts a new cycle.
   b. If pilot does light and control module senses flame current, spark generator is turned off and main valve opens.
   c. Natural Gas - If pilot does not light within 15 seconds, pilot valve is closed and spark generator is turned off. Control module waits 5 minutes, then attempts to ignite pilot again. This cycle will continue indefinitely if pilot ignition control does not sense pilot flame.
5. During main burner operation:
   a. Ignition control monitors pilot flame. If signal is lost, main gas valve closes and spark starts. Ignition controls starts a flame-proving cycle as in step 4, above.
   b. If power is interrupted, main and pilot gas valves close. Ignition control will start again at step 3, left, when power is restored.
6. When the water temperature limit switch opens, the blower shuts off, causing the pressure switch to open. The ignition control then closes the main gas valve. The circulator continues to run.
7. When the thermostat opens (demand satisfied), the ignition control closes pilot and main gas valves. Blower and circulator shut down.
8. Boiler is now in the off (stand-by) cycle.
9. Repeat **steps 2 through 7** several times to verify controls are operating correctly.
10. Return thermostat(s) to normal setting.
11. Set the thermostat heat anticipator as instructed in the wiring diagram (and on boiler wiring diagram label).

Normal Operation of Dual Pressure Switch Assembly (GWI-190 only)

With the inducer on, both the air pressure switch and high fire pressure switch will be closed.

The air pressure switch closes the safety circuit for the control. The high fire pressure switch completes the circuit to the high fire input of the gas valve, enabling the gas valve to deliver full manifold pressure.

11. Sequence of Operation (continued)

Figure 25 Control module sequence of operation — status light indications

Steps (Following step 8, cycle goes back to step 1.)	Call for heat?	POWER	TSTAT CIRC	LIMIT	PURGE	FLAME	TIMING
1. Standby · Waiting for call for heat	NO	ON	OFF	OFF	OFF	OFF	—
2. Call for heat · Circulator on	YES	ON	ON	OFF	OFF	OFF	—
3. Limit circuit · Limit controls closed · Rollout TFE contacts closed	YES	ON	ON	ON	OFF	OFF	—
4. Inducer · Inducer turns on	YES	ON	ON	ON	OFF	OFF	—
5. Pressure circuit · Pressure switch contacts closed · Prepurge for 10 seconds	YES	ON	ON	ON	ON	OFF	35 sec
6. Pilot flame proven * · Gas valve open · Pilot remains on · Boiler producing heat	YES	ON	ON	ON	ON	ON	15 sec
7. Limit cycle · Limit circuit open · Gas valve closed	YES	ON	ON	ON	OFF	OFF	—
8. Flame outage · Flame out · Boiler recycles	NO	ON	ON	ON	OFF	OFF	—
9. Thermostat satisfied · Circulator off · Blower postpurge	NO	ON	OFF	ON	ON	OFF	15 sec
10. Circulator exercise routine · Circulator turns on for 30 seconds if boiler not operated in 30 days	NO	ON	OFF	OFF	OFF	OFF	30 sec

ON = "ON" OFF = "OFF"

* See **Section** 11, Items 4b and 4c for control response to failure to prove pilot flame.

Control will lockout under the following conditions:
- Line voltage polarity is reversed
- Stray voltage is sensed on thermostat line
- Flame is sensed when it shouldn't be there

Control will reset after these lockouts if any of the following occur
- 1 hour waiting period
- Opening and closing of thermostat circuit for 2 to 20 seconds
- Removal of 120 VAC power for 2 to 20 seconds

71032

11. Sequence of Operation (continued)

Figure 26 Schematic wiring diagram - GWI-048, -058, -119, & -158

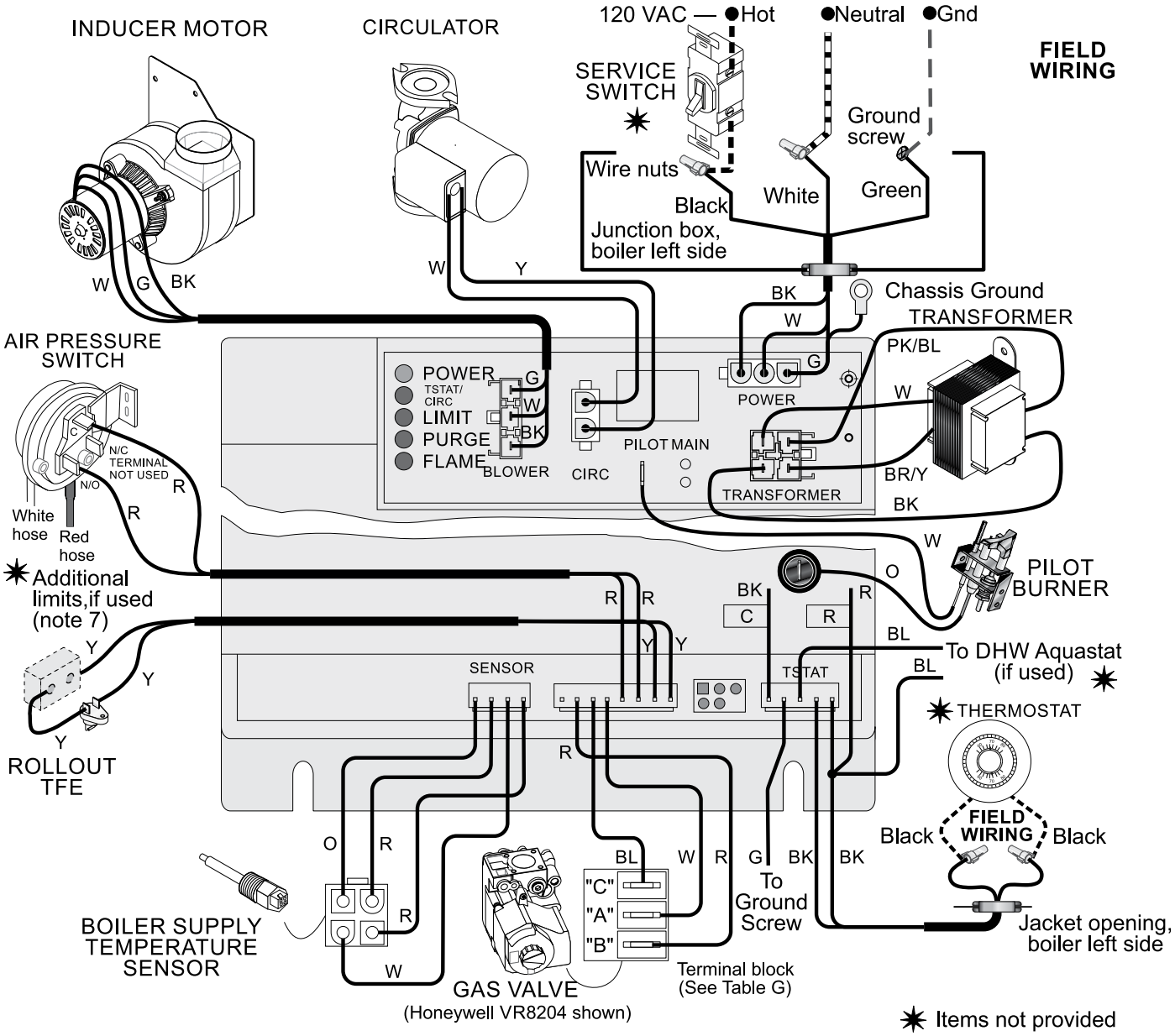

11. Sequence of Operation (continued)

Figure 27 Schematic wiring diagram - GWI-90 & -190

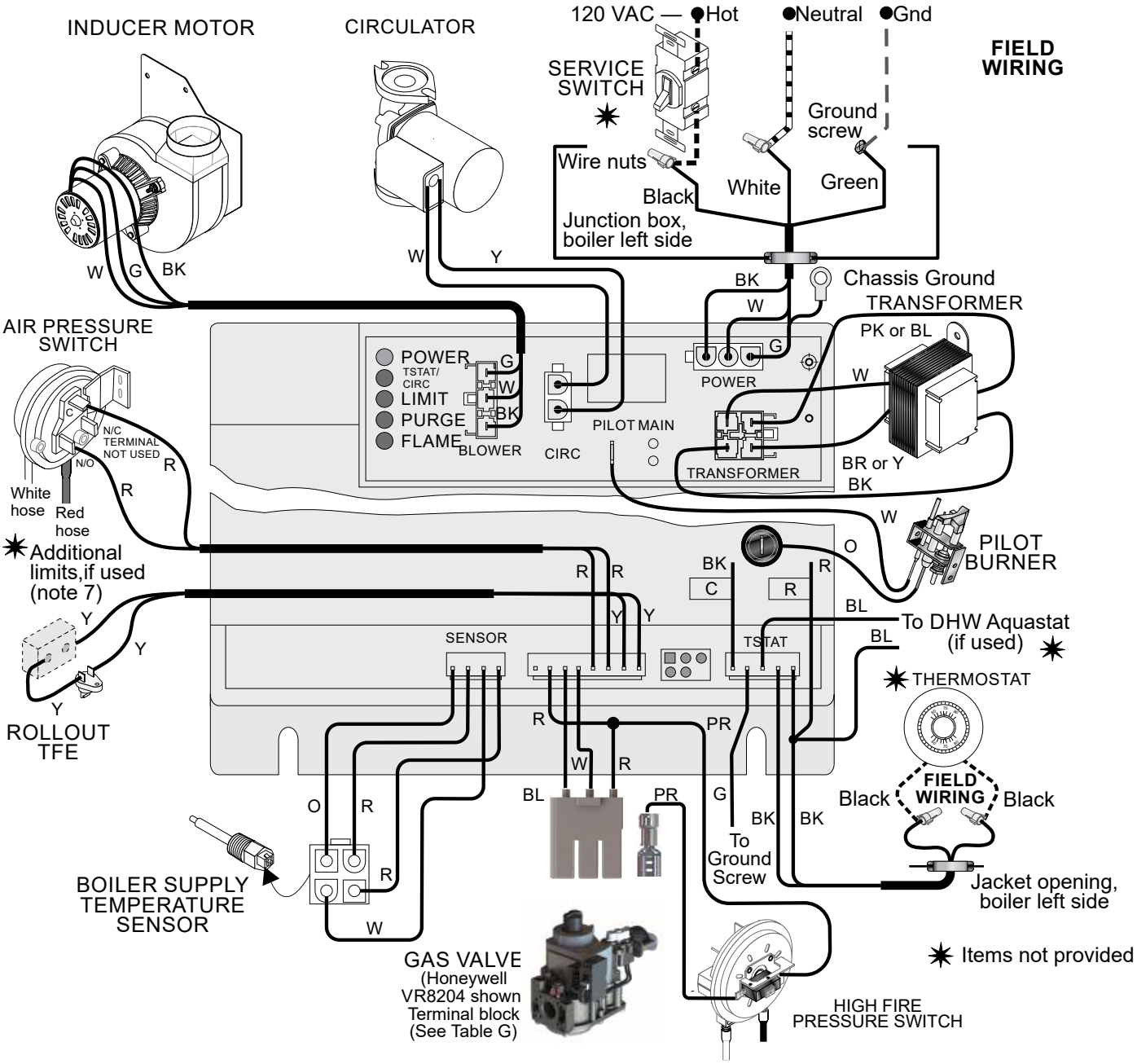

11. Sequence of Operation (continued)

Figure 28 Ladder wiring diagram - GWI-048, -058, -119, & -158

WARNING Electrical shock hazard — can cause severe injury or death. Disconnect power before installing or servicing.

CAUTION **DO NOT connect directly from 3-wire zone valves to the T-T terminals on the boiler.** When using 3-wire zone valves, install an isolation relay. Connect the zone valve end switch wires to the isolation relay coil. Connect the isolation relay contact across the boiler T-T terminals. Failure to comply can result in damage to boiler components or cause unreliable operation, resulting in possible severe property damage.

NOTICE
- The control module is polarity-sensitive to the incoming 120 VAC power. If polarity is reversed, control will flash the **POWER** light when powered and will not cycle boiler.
- All contacts shown without power applied.
- Connector and status light locations/orientations may vary.

Legend for ladder wiring diagram	
	120 VAC **field wiring**
	Low voltage field wiring
	120 VAC **factory wiring**
	Low voltage factory wiring
	High voltage spark ignition wiring
	Ground connectors

Table G: Gas valve terminals and anticipator settings

Gas valve	"A"	"B"	"C"	Anticipator amps
Honeywell VR**8204**	**MV/PV**	**MV**	**PV**	**0.6**
Honeywell VR**8304**	**MV/PV**	**MV**	**PV**	**0.8**

1. All wiring must be installed in accordance with N.E.C ANSI/NFPA 70 - latest edition and any other national, state, or local code requirements.
2. Pilot lead wires are not field replaceable. Replace pilot assembly if necessary.
3. If any of the original wire as supplied with the appliance must be replaced, use minimum 105 °C wire or equivalent. Exception — wires to a rollout TFE must be 200 °C or equivalent.
4. Thermostat anticipator setting (single zone) — see Table G for anticipator setting, depending on which gas valve is installed in boiler.
5. For multiple zoning, use either zone valves or circulators. Refer to the component manufacturer's instructions and this manual for application and wiring suggestions.
6. Refer to control component instructions packed with the boiler for application information.
7. Wire any additional limit controls (low water cut-off, additional high limit, etc.) in series with boiler rollout TFE as shown.

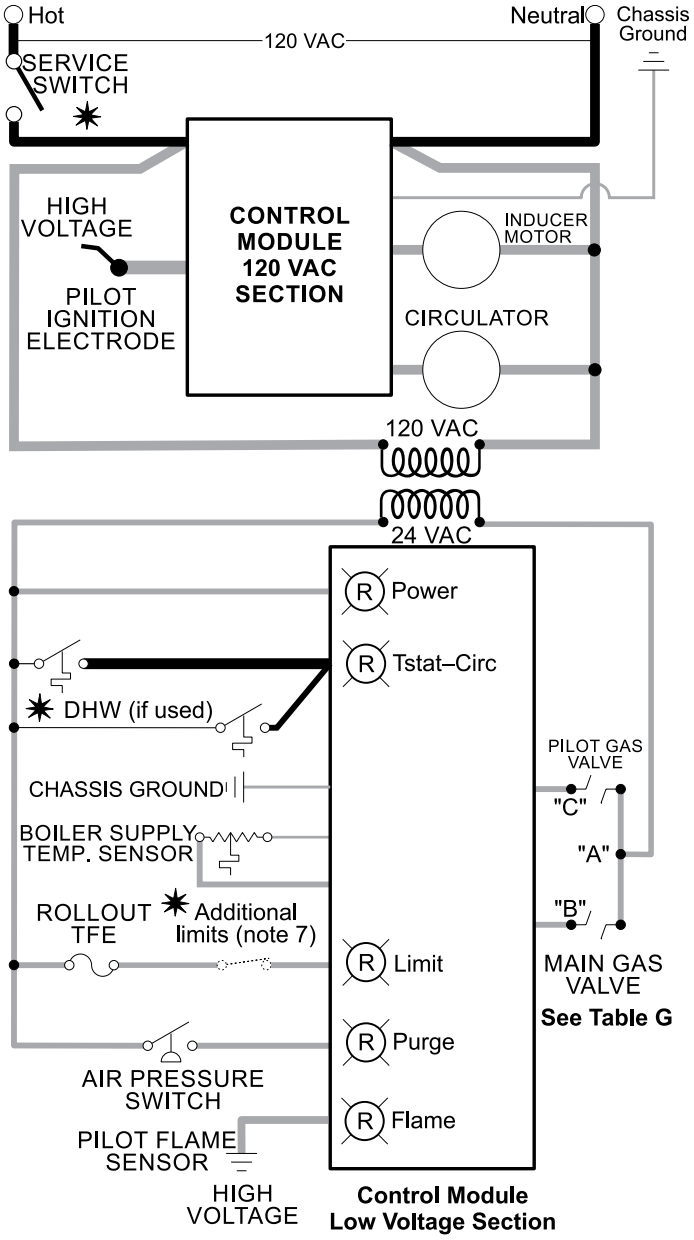

11. Sequence of Operation (continued)

Figure 29 Ladder wiring diagram - GWI-90 & -190

WARNING Electrical shock hazard — can cause severe injury or death. Disconnect power before installing or servicing.

CAUTION **DO NOT connect directly from 3-wire zone valves to the T-T terminals on the boiler**. When using 3-wire zone valves, install an isolation relay. Connect the zone valve end switch wires to the isolation relay coil. Connect the isolation relay contact across the boiler T-T terminals. Failure to comply can result in damage to boiler components or cause unreliable operation, resulting in possible severe property damage.

NOTICE
- The control module is polarity-sensitive to the incoming 120 VAC power. If polarity is reversed, control will flash the **POWER** light when powered and will not cycle boiler.
- All contacts shown without power applied.
- Connector and status light locations/orientations may vary.

Legend for ladder wiring diagram

- 120 VAC field wiring
- Low voltage field wiring
- 120 VAC factory wiring
- Low voltage factory wiring
- High voltage spark ignition wiring
- Ground connectors

Table G: Gas valve terminals and anticipator settings

Gas valve	"A"	"B"	"C"	Anticipator amps
Honeywell VR8304	MV/PV	MV	PV	0.8

1. All wiring must be installed in accordance with N.E.C ANSI/NFPA 70 - latest edition and any other national, state, or local code requirements.
2. Pilot lead wires are not field replaceable. Replace pilot assembly if necessary.
3. If any of the original wire as supplied with the appliance must be replaced, use minimum 105 °C wire or equivalent. Exception — wires to a rollout TFE must be 200 °C or equivalent.
4. Thermostat anticipator setting (single zone) — see Table G for anticipator setting, depending on which gas valve is installed in boiler.
5. For multiple zoning, use either zone valves or circulators. Refer to the component manufacturer's instructions and this manual for application and wiring suggestions.
6. Refer to control component instructions packed with the boiler for application information.
7. Wire any additional limit controls (low water cut-off, additional high limit, etc.) in series with boiler rollout TFE as shown.

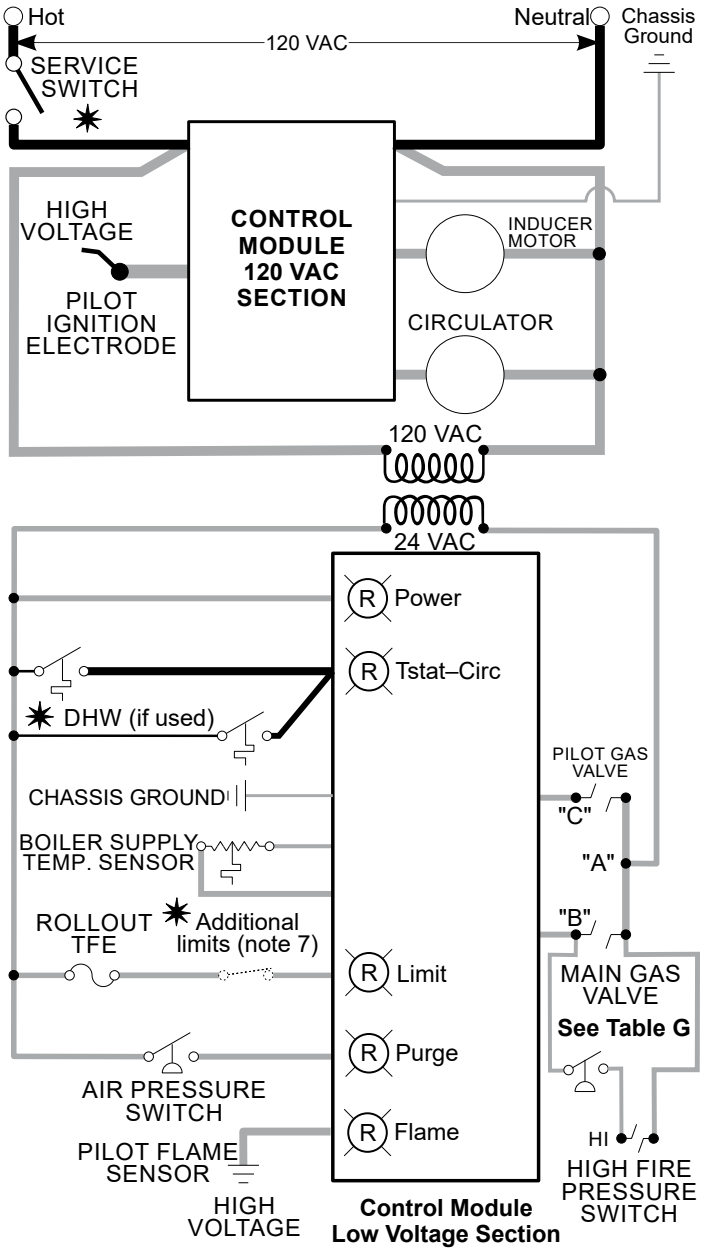

✷ Items not provided

12. Operating Instructions

FOR YOUR SAFETY READ BEFORE OPERATING

WARNING If you do not follow these instructions exactly, a fire or explosion may result causing property damage, personal injury or loss of life.

A. This appliance is equipped with an ignition device which automatically lights the pilot. Do not try to light the pilot by hand.

B. BEFORE OPERATING, smell all around the appliance area for gas. Be sure to smell next to the floor because some gas is heavier than air and will settle on the floor. See below.

C. Use only your hand to turn the gas control knob. Never use tools. If the knob will not turn by hand, don't try to repair it, call a qualified service technician. Force or attempted repair may result in a fire or explosion.

D. Do not use this appliance if any part has been under water. Immediately call a qualified service technician to inspect the appliance and to replace any part of the control system and any gas control, which has been under water.

WHAT TO DO IF YOU SMELL GAS

- Do not try to light any appliance.
- Do not touch any electric switch; do not use any phone in your building.
- Immediately call your gas supplier from a phone outside the structure. Follow the gas supplier's instructions.
- If you cannot reach your gas supplier, call the fire department.

OPERATING INSTRUCTIONS

1. STOP! Read the safety information above on this label.
2. Set the "thermostats" to lowest setting.
3. Turn off all electrical power to the appliance.
4. Remove front panel.
5. This appliance is equipped with an ignition device which automatically lights the pilot. Do not try to light the pilot by hand.
6. The gas control knob clockwise ↷ to "OFF".

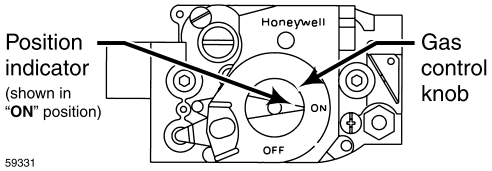

7. Wait five (5) minutes to clear out any gas. Then smell for gas, including near the floor. If you smell gas, STOP! Follow "WHAT TO DO IF YOU SMELL GAS" in the safety information above. If you don't smell gas, go to the next step.
8. Turn gas control knob counterclockwise ↶ to "ON."
9. Turn on all electric power to the appliance.
10. Set "thermostats" to desired setting.
11. If the appliance will not operate when there is a call for heat and the piping is not hot , follow the instructions "To Turn Off Gas To The Appliance" and call your service technician or gas supplier.
12. Reinstall front panel.

TO TURN OFF GAS TO THE APPLIANCE

1. Set the thermostat to lowest setting.
2. Turn off all electric power to the appliance if service is to be performed.
3. Remove front panel.
4. Turn gas control knob clockwise ↷ to "OFF." Do not force.
5. Reinstall front panel.

550-223-041(0724)

13. Service and Maintenance

Table 8 Service and maintenance schedules (service technician and user)

Service technician (see following pages for instructions)	Owner maintenance (see User's Information Manual for instructions)	
Annual start-up	☐ **Daily**	• Check boiler area • Check boiler pressure/ temperature gauge • Check air openings
☐ **Inspect:** • Reported problems • Boiler area • Air openings • Flue gas vent system • Pilot and main burner flames • Water piping • Boiler heating surfaces • Burners and base • Condensate drain system	☐ **Monthly**	• Check boiler piping • Check venting system • Check condensate drain system • Check boiler relief valve • Check automatic air vents (if used) • Check pilot and main burner flames • Check and clean vent termination (sidewall-vented boilers only)
☐ **Service:** • Inducer motor • Oiled-bearing circulators • Temperature sensor	☐ **Periodically**	• Test low water cutoff (if used) • Oil inducer motor
☐ **Start-up:** • Perform start-up per manual	☐ **Every 6 months**	• Operate relief valve
☐ **Check/test:** • Gas piping • Cold fill and operating pressures • Air vents and air elimination • Limit controls and cutoffs • Expansion tank • Boiler relief valve	☐ **End of season**	• Shut down procedure
☐ **Review:** • Review with owner		
☐ **Cleaning boiler heating surfaces**		

WARNING Follow the "Service and maintenance" procedures given throughout this manual and in component literature shipped with the boiler. See "**Read this first**" on **page 2**. Failure to perform the service and maintenance could result in damage to the boiler or system. Failure to follow the directions in this manual and component literature could result in severe personal injury, death or substantial property damage.

WARNING The boiler should be inspected and started annually, at the beginning of the heating season, only by a qualified service technician. In addition, the maintenance and care of the boiler designated in **Table 8,** and explained on the following pages must be performed to assure maximum boiler efficiency and reliability. Failure to service and maintain the boiler and system could cause equipment failure resulting in severe personal injury, death or substantial property damage.

13. Service and Maintenance (continued)

WARNING The boiler contains ceramic fiber and fiberglass materials. Use care when handling these materials per instructions on **page 58** of this manual. Failure to comply could result in severe personal injury.

☐ Inspect

Reported Problems

Inspect any problems reported by owner and correct before proceeding.

Boiler Area

1. Verify that boiler area is free of any combustible materials, gasoline and other flammable vapors and liquids.
2. Verify that boiler area (and air intake) is free of any of the contaminants listed in **Table 2, page 5** of this manual. If any of these are present in the boiler intake air vicinity, they must be removed. If they cannot be removed, install combustion air piping to the boiler in accordance with national, or local codes.

Air Openings

1. Verify that combustion and ventilation air openings to the boiler room and/or building are open and unobstructed. Check operation and wiring of automatic combustion air dampers, if used.
2. Verify that boiler vent discharge and air intake are clean and free of obstructions.

Flue Gas Vent System

1. Visually inspect entire flue gas venting system for blockage, deterioration or leakage. Repair any joints that show signs of leakage in accordance with vent manufacturer's instructions.
2. Verify that masonry chimneys are lined, lining is in good condition, and there are not openings into the chimney.

WARNING Failure to inspect for the above conditions and have them repaired can result in severe personal injury or death.

Pilot and Main Burner Flames

1. Visually inspect pilot burner and main burner flames as directed under **Section 8, page 27** of this manual.

Water Piping

1. Check the boiler interior piping and all system piping for signs of leaks.
2. Repair any leaks before proceeding.

WARNING Electrical shock hazard — Turn off power to the boiler before any service operation on the boiler except as noted otherwise in this instruction manual. Failure to turn off electrical power could result in electrical shock, causing severe personal injury or death.

DANGER Do not use petroleum-based cleaning or sealing compounds in boiler system. Severe damage to boiler will occur, resulting in substantial property damage.

WARNING Eliminate all system or boiler leaks. Continual fresh makeup water will reduce boiler life. Minerals can build up in sections, reducing heat transfer, overheating cast iron, and causing section failure. Leaking water may also cause severe property damage.

☐ Inspect

Boiler Heating Surfaces

1. Disconnect the vent pipe at the boiler inducer outlet connection after turning off power to the boiler.
2. Use a bright light to inspect the flue pipe interior and inducer interior.
3. Inspect the boiler vent outlet area and heating surfaces by looking through the opening.
4. If the vent pipe or inducer interior show evidence of soot, follow "Cleaning boiler heating surfaces", **page 39**, to remove the flue collector and clean the boiler if necessary after close inspection of boiler heating surfaces. If there is evidence of rusty scale deposits, check the water piping and control system to make sure the boiler return water temperature is properly maintained (per this manual).
5. Reconnect vent to inducer outlet (seal joint per **page 8**) and replace all boiler components before returning to service.
6. Check inside and around boiler for evidence of any leaks from the boiler. If found, locate source of leaks and repair.

Burners and Base

1. After turning off power to the boiler, remove the jacket door and base access panel **Figure 35** , item 4, **page 52**).
2. Inspect burners and all other components in the boiler base.
3. If burners must be cleaned, raise rear of each burner to release from support slot, slide forward and remove. Then brush and vacuum the burners thoroughly, making sure all ports are free of debris. Carefully replace all burners, making sure burner with pilot bracket is replaced in its original position and all burners are upright (ports up).
4. Inspect the base insulation.
   a. Verify that the insulation is intact and secure against all four sides of the base.

WARNING If insulation is damaged or displaced, do not operate the boiler. Replace or reposition insulation as necessary. Failure to replace damaged insulation can result in a fire hazard, causing severe personal injury, death or substantial property damage.

Condensate Drain System

1. If vent system is equipped with a condensate drain, check the hose and connections for tightness.
2. Verify the hose is unobstructed and in good condition and that condensate can flow freely. Replace hose if necessary.

13. Service and Maintenance

☐ Service

Inducer Motor

With boiler power **OFF**, place a few drops of SAE 20 motor oil in each of the two motor oiling cups.

⚠WARNING Use only SAE. 20 motor oil to lubricate inducer motor. Do not use universal household oils. Motor could be damaged, resulting possible severe property damage.

Oiled-Bearing Circulators

1. The circulator shipped with the GWI boiler is water-lubricated. No oiling is required.
2. Check other circulators in the system. Oil any circulators requiring oil, following circulator manufacturer's instructions. Over-oiling will damage the circulator.

Temperature Sensor

The temperature sensor may accumulate deposits on the probe surface. Annual inspection and cleaning of the probe will improve boiler performance.

Disconnect power, unplug harness from sensor.

a. Drain boiler water to a level below the sensor.
b. Remove sensor from boiler.
c. Wipe any built up contaminates from probe and insulator surfaces.
d. Reinstall sensor into boiler.
e. Refill boiler.

☐ Start-up

1. Perform start-up procedures of Section 8, **page 25** – **page 27**, including procedure to verify operation of burners on **page 27**.
2. Verify cold fill pressure is correct and that fill system is working properly.
3. Verify antifreeze level (if used) is at the right concentration and that inhibitor level is correct.
4. Check gas piping, per manual Sections 6 and 8, verifying no indications of leakage and all piping and connections are in good condition.
5. Read the "Operating instructions" (**page 35**).
6. Start the boiler following the "Operating instructions" (**page 35**).

☐ Check/test

Gas Piping

1. Sniff near floor and around boiler area for any indication of a gas leak.
2. Test gas piping using bubble test, per **Section 6, page 23** of this manual, if there is any indication of a leak.

Cold Fill and Operating Pressures

1. While the system is cold, note the pressure reading on the boiler pressure/temperature gauge. Verify that cold fill pressure is correct.
2. Watch the pressure as the boiler and system heat up to ensure pressure rise is normal. Too high a rise would indicate a waterlogged or undersized expansion tank.

☐ Check/Test

Air Vents and Air Elimination

1. Inspect automatic air vents (if used). Also inspect air separators to ensure they are operational.
2. The cap must be unscrewed one turn to allow air to escape.
3. If the air vent is leaking, remove cap and briefly push valve — then release to clean the valve seat.
4. Replace cap by twisting all the way onto valve and then unscrewing one turn.

Limit Controls and Cutoffs

1. Inspect and test the boiler limit control. Verify operation by turning control set point below boiler temperature. Boiler should cycle off. Return dial to original setting.
2. Inspect and test additional limit controls or low water cutoffs installed on system.

Expansion Tank

1. Expansion tanks provide space for water to move in an out as the heating system water expands due to temperature increase or contracts as the water cools. Tanks may be open, closed or diaphragm or bladder type. See Section 4, **page 13** of this manual for suggested locations of expansion tanks and air eliminators.

   Open-type — located above highest radiator or baseboard unit, usually in the attic or closet. Has a gauge glass and overflow pipe to a drain.

   Closed-type — welded gas tight and located above boiler. Tank is partially filled with water, leaving an air cushion for expansion.

   - Make sure this type of tank is fitted with a tank fitting, such as the B & G Tank-Trol or Taco Taco-Trol. This fitting reduces gravity circulation of air-saturated tank water back to the system and prevents the air from bubbling up through the water as it returns from the system.
   - Do not use automatic air vents in systems with closed-type tanks. The air will escape from the system instead of returning to the tank. Eventually, the tank will waterlog and no longer control pressurization. The boiler relief valve will weep frequently.

   Diaphragm- or bladder-type — welded gas tight with a rubber membrane to separate the tank pressurizing air and the water. May be located at any point in the system, but most often found near the boiler.

   - Systems with this type of expansion tank require at least one automatic air vent, preferably located on top of an air eliminator, as shown in examples in manual Section 4, **page 13**.
2. If relief valve has tended to weep frequently, the expansion tank may be waterlogged or undersized.

   Closed-type tank — tank is most likely waterlogged. Install a tank fitting if not already installed. Then check fill level per fitting manufacturer's instructions. If fill level is correct, check tank size against manufacturer's instructions. Replace with a larger tank if necessary.

   Diaphragm- or bladder-type — first, check tank size to be sure it is large enough for the system. If size is too small, add additional tank(s) as necessary to provide sufficient expansion. If tank size is large enough, remove tank from system and check charge pressure (usually 12 psig for residential applications). If tank won't hold pressure, membrane has been damaged. Replace tank.

13. Service and Maintenance (continued)

☐ Check/Test

Boiler Relief Valve

1. Inspect the relief valve and lift the lever to verify flow as in the following warnings, excerpted from a relief valve manufacturer's warning label. Before operating any relief valve, ensure that it is piped with its discharge in a safe area to avoid severe scald potential. Read manual Section 4, **page 13**, before proceeding further.

⚠WARNING Safety relief valves should be reinspected AT LEAST ONCE EVERY THREE YEARS, by a licensed plumbing contractor or authorized inspection agency, to ensure that the product has not been affected by corrosive water conditions and to ensure that the valve and discharge line have not been altered or tampered with illegally. Certain naturally occurring conditions may corrode the valve or its components over time, rendering the valve inoperative. Such conditions are not detectable unless the valve and its components are physically removed and inspected. This inspection must only be conducted by a plumbing contractor or authorized inspection agency — not by the owner. Failure to reinspect the boiler relief valve as directed could result in unsafe pressure buildup, which can result in severe personal injury, death or substantial property damage.

2. After following the above warning directions, if the relief valve weeps or will not seat properly, replace the relief valve. Ensure that the reason for relief valve weeping is the valve and not over-pressurization of the system due to expansion tank waterlogging or undersizing.

⚠WARNING Following installation, the valve lever must be operated AT LEAST ONCE A YEAR to ensure that waterways are clear. Certain naturally occurring mineral deposits may adhere to the valve, rendering it inoperative. When manually operating the lever, water will discharge and precautions must be taken to avoid contact with hot water and to avoid water damage. Before operating lever, check to see that a discharge line is connected to this valve directing the flow of hot water from the valve to a proper place of disposal otherwise severe personal injury may result. If no water flows, valve is inoperative. Shut down boiler until a new relief valve has been installed.

☐ Review with Owner

1. Review the User's Information Manual with the owner.
2. Emphasize the need to perform the maintenance schedule specified in the User's Information Manual (and in this manual as well).
3. Remind the owner of the need to call in a licensed contractor should the boiler or system exhibit any unusual behavior.
4. Remind the owner to follow the proper shutdown procedure and to schedule an annual start-up at the beginning of the next heating season.

☐ Cleaning Boiler Heating Surfaces

⚠WARNING The boiler contains ceramic fiber and fiberglass materials. Use care when handling these materials per instructions on **page 58** of this manual. Failure to comply could result in severe personal injury.

1. Shut down boiler:
   - Follow "To Turn Off Gas to Appliance" instructions on boiler and "**Operating instructions**".
   - Do not drain boiler unless it will be exposed to freezing temperatures. If using antifreeze in system, do not drain.
2. Follow shutdown procedure.
3. Remove venting system connection to boiler.
4. Remove top jacket panel. Turn back insulation.
5. Remove collector box/transition assembly. Clean sealant from assembly and sections.
6. Remove radiation plates hanging between sections.
7. Remove burners from base. Brush and vacuum burners to remove all dust and lint. Verify that all burner ports are free of debris.
8. Place newspapers in base of boiler to collect soot.
9. Clean between sections with wire flue brush.
10. Remove newspaper and soot. Vacuum or brush base and surrounding area.
11. Reinstall radiation plates.
12. Replace collector box/transition assembly. Seal with sealant. Obtain gas-tight seal to prevent flue gas spillage and carbon monoxide emissions, resulting in severe personal injury or death.
13. Replace insulation and jacket top panel.
14. Start up boiler following **page 25** – **page 27** of this manual and the boiler "Operating Instructions". Excessive sooting indicates improper gas combustion. If found check for proper combustion and make any necessary adjustments.

14. Troubleshooting

CAUTION Label all wires prior to disconnection when servicing controls. Wiring errors can cause improper and dangerous operation.

WARNING Never jumper (bypass) rollout thermal fuse element or any other device except for momentary testing as outlined in "Troubleshooting" charts, **page 44 - page 50** . Severe personal injury, death or substantial property damage can result.

WARNING Burner access panel must be in position during boiler operation to prevent momentary flame rollout on ignition of main flame. Severe personal injury or substantial property damage will result.

Before Troubleshooting:

1. Have the following items:
   a. Voltmeter that can check 120 VAC and 24 VAC.
   b. Microammeter with a minimum scale range of 0-25.
   c. Continuity checker.
   d. U-tube manometer
   e. Inclined manometer with 0 – 2" w.c. range.
2. Check for 120 VAC (minimum 102 VAC to maximum 132 VAC) to boiler.
3. Make sure thermostat is calling for heat and contacts (including appropriate zone controls) are closed. Check for 24 VAC between thermostat wire nuts and ground.

Check the Following:

1. Wire connectors to control module are securely plugged in at module and originating control.
2. Air pressure switch hoses are properly and securely plugged in and are not damaged.
3. Gas pressures:
   a. With boiler off - 13" w.c. maximum natural or propane gas pressure upstream of gas valve.
   b. With boiler on - 5" w.c. minimum natural gas pressure or 11" w.c. propane gas pressure upstream of gas valve.
4. With boiler on, verify gas manifold pressure (down stream of gas valve):
   a. GWI-048 thru -158 manifold pressure
      Natural Gas: 3.5" w.c.
      Propane: 10" w.c.
   b. GWI-190 manifold pressure
      Natural Gas: High Fire 3.5" w.c. Low fire 0.9" w.c.
      Propane: High Fire 10" w.c. Low fire 2.6" w.c.
   c. GWI-190 only: If the boiler is only operating at the Low Fire Manifold Pressure:
      Check to determine that there is 24Vac being delivered to the HI connection on the gas valve. If yes, then replace the gas valve. If no, verify that the High Fire Pressure Switch is in good working condition. Verify the air pressure switch reading from the procedure provided on **page 40**.

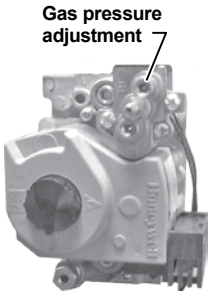

GWI-048, -058, -119, & -158

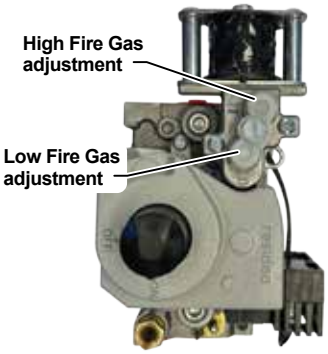

GWI-90 & -190

How to Check Pressure Switch Setting
(if specified in Troubleshooting charts)

NOTICE Make sure boiler water temperature is 100 °F or cooler before starting procedure to obtain appropriate readings.

1. See **Figure 30** and **Table 9**.
2. Remove both air pressure switch hoses from air pressure switch Y-fitting in the case of the Dual Pressure Switch Assembly.
3. Install tees and tubing as shown in **Figure 30** to inclined manometer.
4. Turn off gas valve and set thermostat to call for heat. Inducer will run but burners will not ignite.
5. Check for 24 VAC between both air pressure switch terminals.
6. If manometer reading is above the setpoint of the switch (see Table 9), but there is not 24 VAC between air pressure switch terminals "C" and "NO" — replace air pressure switch.

14. Troubleshooting (continued)

Troubleshooting Air Pressure Reading

1. If manometer reading is lower than the setpoint of the switch (see **Table 9**) — check for possible causes:
   - blockage in hoses
   - obstruction in inducer housing outlet
   - loose inducer wheel on motor shaft
   - inducer motor not in proper rpm
   - inducer back plate not sealed properly
   - blockage in block assembly
   - blockage in flue pipe or termination
   - incorrect pressure switch
2. If manometer reading is above the setpoint of the switch (see **Table 9**), but there is not 24 VAC between both air pressure switch terminals — replace air pressure switch.

Return to Normal Operation

When pressure reading is correct and air pressure switch is operating properly — remove tees and reinstall hoses to air pressure switch.

NOTICE The boiler will not operate correctly unless pressure switch hoses are correctly located. The red hose connects from the black housing hose barb on the pressure switch (+) to the tapping on the right side of the collector hood. The white hose connects from the tan housing hose barb on the pressure switch (-) to the tapping on left side of the collector hood / transition (between flue collector and inducer) as shown in **Figure 30**.

For the GWI-190 with the Dual Pressure Switch Assembly, the red hose connects to the Y-fitting connected to both (+) black hose barbs of the pressure switch assembly. See **Figure 30**.

Table 9 Pressure switch setpoint (for elevations above 2,000 ft., contact your local supplier for details.)

Boiler model number	Inches W.C.
GWI-048	2.10
GWI-058	1.80
GWI-119	1.35
GWI-158	1.20

Boiler model number	Low Fire Pressure Switch (Red Label)	High Fire Pressure Switch (Purple Label)
	Inches W.C.	Inches W.C.
GWI-90	1.30	1.80
GWI-190	1.05	1.45

Figure 30 Checking pressure switch

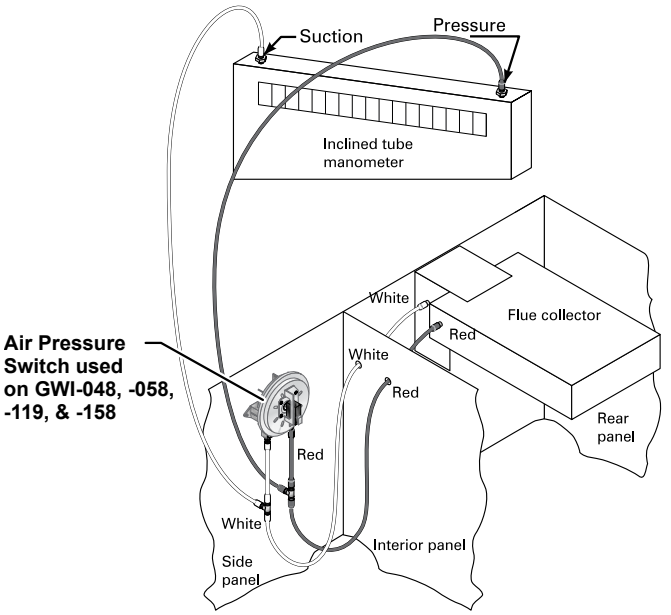

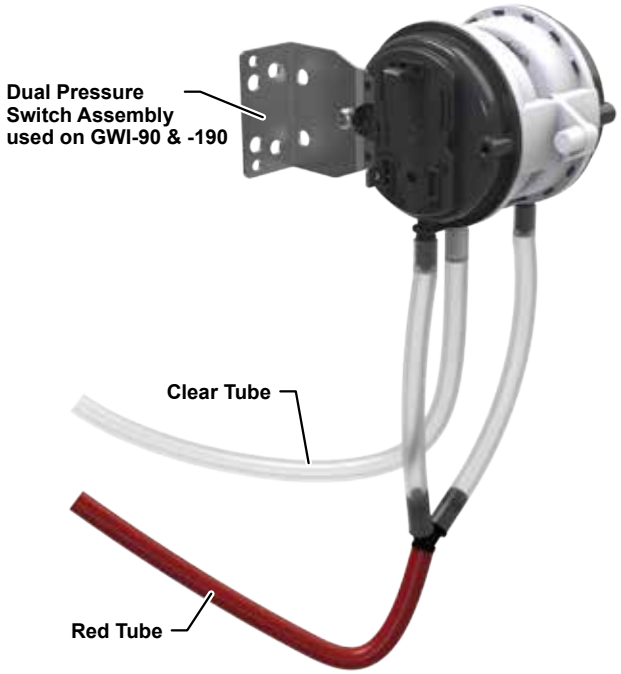

14. Troubleshooting (continued)

Temperature Sensor

1. The boiler temperature sensor is a resistance-type device.
2. See **Figure 31** below shows the correct value for the sensor at various temperatures.
3. Use the resistance values at 32°F, 60°F, 70°F and 212°F to measure the sensor resistance at known temperatures (ice point, room temperature and sea level boiling point). For ice point and boiling point, insert the sensor in water at that temperature. Use an ohmmeter to read resistance value between thermistor # and thermistor common. See **Figure 33, page 43**, for sensor plug details.

Figure 31 Sensor resistance values

Sensor resistance values					
Temp (°F)	Sensor ohms		Temp (°F)	Sensor ohms	
	Min	Max		Min	Max
32	34265	37871	120	4517	4992
40	27834	30764	130	3698	4088
50	21630	23907	140	3043	3364
60	16944	18727	150	2517	2782
70	13372	14780	160	2091	2311
80	10629	11747	170	1744	1928
90	8504	9399	180	1461	1615
100	6847	7568	190	1229	1359
110	5545	6129	200	1038	1147

Control Module

WARNING **Solder or water** splatter between plugs and circuit board can cause improper operation of control module. Place a shield over the boiler internal controls and components during installation. Failure to comply could result in severe personal injury, death or substantial property damage.

NOTICE Make sure **ground wiring** is installed per wiring diagram. Good grounding is extremely important for proper operation.

Control indicator lights — LOCKOUT modes

See **Charts 1** through **7** in this section for detailed troubleshooting procedures.

NOTE: If no power at control verifty if external LWCO is LOCKED OUT.

If in Low Water condition, Power is disrupted to control.

Figure 32 **Control module**

Control indicator lights — HARD LOCKOUT Summary (Flashing LED's)

MAY remove 120VAC power for more than 2 seconds to clear lockout OR ignition control will automatically restart sequence of operation after 1 hour waiting period after fault condition is cleared.

INDICATOR LIGHT	CONDITION
POWER	
Flashes once per second	120 VAC connection to boiler reversed or there is insufficient earth ground.
Flash code 2*	Internal fault, microprocessor or memory.
Flash code 3*	Unused.
Flash code 4*	Unused.
Flash code 5*	Internal fault, water thermistors disagree.
Flash code 6*	Internal fault, gas valve circuit.

* Flash code pattern: POWER LED flashes 2, 3, etc. times rapidly followed by 2 seconds off, then repeats.

SOFT LOCKOUT Summary (Flashing LED's)

MAY remove 120VAC power for more than 2 seconds, cycle thermostat for between 2 and 20 seconds, OR ignition control will automatically restart sequence of operation after 1 hour waiting period.

INDICATOR LIGHT	CONDITION
POWER + TSTAT/CIRC	High voltage detected on TSTAT circuit
POWER + PURGE	Pressure Switch stuck open or closed.
POWER + FLAME	POWER + FLAME Flame sensed without call for heat or out of sequence during ignition trial.
CAUTION Summary (Flashing LED's)	
INDICATOR LIGHT	**CONDITION**
PURGE	Pressure switch opened after it had been proven closed.
LIMIT	Fault detected in temperature sensing hardware.
FLAME	Flame loss or flame not sensed during trial for ignition.

Troubleshooting the Control Module

See **Figure 33, page 43**, for location of harness plug receptacles and plugs on the control module.

14. Troubleshooting (continued)

Figure 33 Control module connections

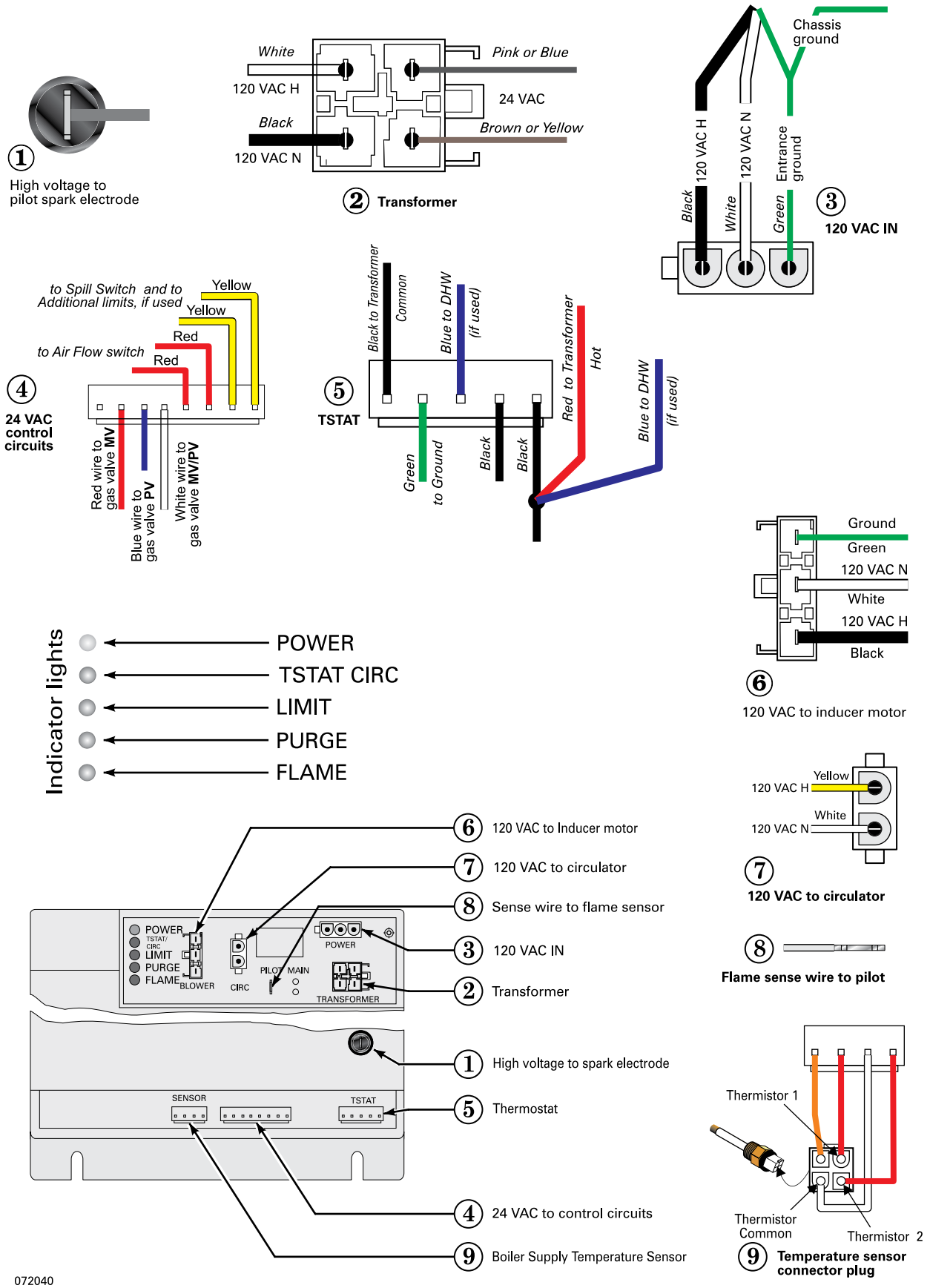

14. Troubleshooting (continued)

CHART 1 — Troubleshooting **POWER** light status

— Usually indicates reversed 120 VAC polarity if POWER light flashes by itself —

WARNING **Electrical shock hazard** — Wherever you see ▲ **TURN OFF POWER** ▲, follow the instructions. Failure to follow instructions could result in severe personal injury, death or substantial property damage.

Is **POWER** *light off?*

- No → *Is* **POWER** *light . . .*
- Yes →

Is **POWER** *light . . .*

Flashing alone?	Flashing with another light?	On steady (NOT flashing)?
TSTAT/CIRC light flashing	**CHART 2**	
PURGE light flashing	**CHART 3**	**CHART 5**
FLAME light flashing	**CHART 4**	**CHART 6**

For insufficient heat or no heat problem, go to **CHART 7** if **POWER** light is on steady, with no other light is flashing.

- Usually indicates polarity on incoming **120 VAC** power line is wrong or has insufficient earth ground.
- Check grounds to make sure unit has sufficient grounding.
- ▲ **TURN OFF POWER** ▲ at service switch or breaker, then reverse the HOT and NEUTRAL wires entering the boiler in the J-box.
- Restore **POWER** at service switch or breaker.

Is **POWER** *light flashing now?*

- No → Boiler should now operate normally.
- Yes → Have system checked by a licensed electrician.

  If problem persists, call your local Williamson-Thermoflo sales representative.

- Make sure service switch or circuit breaker is on or fuses are good.
- Remove **120 VAC IN** plug (**Figure 33, Item 3, page 43**) on control module.
- Using voltmeter, check across top and bottom pins of **120 VAC IN** plug.

Does voltmeter indicate **120 VAC***?*

- No → Problem is with incoming electricity. Have licensed electrician repair circuit.
- Yes →

- Reconnect **120 VAC IN** plug.
- Remove **120 VAC IN** transformer **Primary** plug (**Figure 33, Item 2, page 43**) on control module.
- Using voltmeter, check across top and bottom pins of **Primary** receptacle.

Does voltmeter indicate **120 VAC***?*

- No → Replace control module. Retest.
- Yes →

- Reinstall **120 VAC** transformer **Primary** plug.
- Remove **24 VAC** transformer plug (**Figure 33, Item 5, page 43**) on control module.
- Using voltmeter, check pins of plug.

Does voltmeter indicate **24 VAC***?*

- No → Replace transformer. Retest and check for back feed of voltage from system wiring.
- Yes → Replace control module. Retest.

14. Troubleshooting (continued)

CHART 2 — TSTAT CIRC & POWER lights flashing

— Usually indicates 48 VAC on thermostat circuit (stray voltage) —

WARNING **Electrical shock hazard** — Wherever you see ▲ **TURN OFF POWER** ▲, follow the instructions. Failure to follow instructions could result in severe personal injury, death or substantial property damage.

- Disconnect the two external wires connected to the boiler thermostat leads (two black low voltage leads in J-box).
- Connect a voltmeter across these two incoming wires. Close each thermostat, zone valve and relay in the external circuit one at a time and check the voltmeter reading across the wires.
- There should NEVER be a voltage reading.
- If a voltage does occur under any condition, check and correct the external wiring. (This is a common problem when using 3-wire zone valves.)
- Once the external thermostat circuit wiring is checked and corrected if necessary, reconnect the external thermostat circuit wires to the boiler thermostat wires and allow the boiler to cycle.

Did you find and correct a voltage across the two external thermostat circuit wires?

Yes

- Leave external boiler thermostat connection wires disconnected from boiler.
- Troubleshoot the external thermostat circuit until you find the source of the stray voltage. (Pay close attention to the wiring connections to 3-wire zone valves.)
- Correct the problem and repeat the voltmeter test above, verifying there is no longer a voltage reading under any condition in the external thermostat circuit.
- An isolating relay may be required.

- Boiler should now operate per the normal sequence of operation (**Figure 25, page 30**).

No

- If no voltage is found under any condition of the external thermostat circuit, connect the two boiler thermostat connection leads together (or jumper the boiler aquastat T-T terminals).
- Turn off power to the boiler for 1 minute.
- Turn on power and allow boiler to cycle.

Does the **TSTAT** *and* **POWER** *lights still flash?*

No → Leave external boiler thermostat connection wires disconnected from boiler.

Yes

Replace control module.
Retest.

14. Troubleshooting (continued)

CHART 3 — PURGE & POWER lights flashing

— Usually indicates pressure switch stuck closed or failed to make within 5 minutes —

WARNING **Electrical shock hazard** — Wherever you see ▲ **TURN OFF POWER** ▲, follow the instructions. Failure to follow instructions could result in severe personal injury, death or substantial property damage.

- Reset boiler control by turning off power at service switch or turning down thermostat for at least 45 seconds.
- Thermostat should call for heat and appropriate zone valves open.

Does inducer motor operate?

No → Yes

- Wait 45 seconds.

Does Inducer motor operate?

No → Yes

- Remove **INDUCER** plug (**Figure 33, Item 6, page 43**) from plug receptacle of control module.
- Place voltmeter leads across the **120 VAC N** and **120 VAC H** pins of the **INDUCER** receptacle (left column center and right column bottom pins).

Does the voltmeter indicate 120 VAC?

No → Yes

- Try reseating plug in module receptacle and restart.
- If inducer still does not work, replace inducer assembly.
- Retest.

- Remove one of the wires connected to the pressure switch.
- Check continuity across the switch terminals.

Does the ohmmeter indicate the switch is closed?

No → Yes

- Replace control module.
- Retest.

- Check air pressure switch per manual **Section 14, page 40**.
- Replace if necessary.
- Retest.

- Wait 5 minutes.

Is **PURGE** *light flashing?*

No → Yes

- Boiler should be in normal operating sequence.
- Observe operation until thermostat is satisfied and inducer has completed its post-purge cycle.

Are vent or combustion air passages blocked?

No → Yes

- Clear passages and recycle boiler.
- Recheck boiler operation.

14. Troubleshooting (continued)

CHART 4 — FLAME & POWER lights flashing

— Usually indicates flame sensed when it shouldn't be there —

WARNING **Electrical shock hazard** — Wherever you see ▲ **TURN OFF POWER** ▲, follow the instructions. Failure to follow instructions could result in severe personal injury, death or substantial property damage.

Are manual main shutoff valve and gas valve open?

No

- Leave main manual gas valve closed.
- Turn off power to boiler at service switch or breaker.
- Wait at least 45 seconds.
- Turn on power to boiler.
- Restart boiler, following **Operating instructions** in this manual (**Section 12**).

Do **FLAME** and **POWER** lights still flash?

No

- ▲ **TURN OFF POWER** ▲ to boiler at service switch or breaker.
- Open main manual gas valve.
- Turn on power to boiler at service switch or breaker.
- Restart boiler per operating instructions.
- Perform start-up procedures in boiler manual to verify proper operation.

Yes

- Replace control module.
- Retest.

Yes

- Turn off power to the boiler at service switch or breaker.
- Wait at least 45 seconds.
- Turn on power to boiler.
- Restart boiler, following **Operating instructions** in this manual (**Section 12**).
- Look through the pilot inspection port to see if the pilot is burning during the prepurge period (first 30 seconds of operation).

Is pilot burning during prepurge period?

No

- Allow boiler to continue cycling.

Are **FLAME** & **POWER** *lights flashing?*

No

- Boiler may now be operating normally.
- Perform start-up procedures in boiler manual to verify proper operation.

Yes

- Replace control module.
- Retest.

Yes

- Replace gas valve.
- Retest boiler.

Are **FLAME** & **POWER** *lights flashing?*

No

- Boiler should now operate normally.
- Original flashing **FLAME** light caused by gas valve not operating properly.
- See normal sequence of operation, **Figure 25, page 30**.

Yes

- Replace control module.
- Retest.

14. Troubleshooting (continued)

CHART 5 — PURGE lights flashing and POWER light on steady

— Usually indicates pressure switch opened during run cycle —

— May also be caused by wind gusts in excess of 31 mph for non-direct vent sidewall-vented boilers —

WARNING **Electrical shock hazard** — Wherever you see ▲ **TURN OFF POWER** ▲, follow the instructions. Failure to follow instructions could result in severe personal injury, death or substantial property damage.

- Reset boiler control by turning off power at service switch or turning down thermostat for at least 45 seconds.
- Thermostat should call for heat and appropriate zone valves open.

Does inducer motor operate?

No

- Remove **INDUCER** plug (**Figure 33, Item 6, page 43**) from plug receptacle of control module.
- Place voltmeter leads across the **120 VAC N** and **120 VAC H** pins of the **INDUCER** receptacle (left column center and right column bottom pins).

Does the voltmeter indicate 120 VAC?

Yes

- Replace inducer assembly.
- Retest.

No

- Remove one of the wires connected to the pressure switch.
- Check continuity across the switch terminals.

Does the ohmmeter indicate the switch is closed?

No

- Inspect and check wire harness from control module to pressure switch.
- Reseat connector in control module receptacle.
- If harness is intact and properly seated, but problem persists, replace control module.
- Retest.

Yes

- Check air pressure switch per manual **Section 14, page 40**.
- Replace if necessary. Retest.

Yes

- Wait 5 minutes.

Is **PURGE** *light flashing?*

No

- Boiler should be in normal operating sequence.
- Observe operation until thermostat is satisfied and inducer has completed its post-purge cycle.

Yes

Is vent blocked?

No

- Check air pressure switch per manual **Section 14, page 40**.
- Replace if necessary. Retest.

Yes

- Clear vent and recycle boiler.
- Recheck boiler operation.

14. Troubleshooting (continued)

CHART 6 — FLAME lights flashing and POWER light on steady

ALSO — Troubleshooting failure to establish **main flame**

WARNING **Electrical shock hazard** — Wherever you see ▲ **TURN OFF POWER** ▲, follow the instructions. Failure to follow instructions could result in severe personal injury, death or substantial property damage.

Are main manual shutoff valve and gas valve open?

- No
- Yes

- ▲ **TURN OFF POWER** ▲ to boiler at service switch or breaker.
- Open main manual shutoff valve and boiler gas valve (per **Operating instructions** in this manual). Wait at least 45 seconds.
- Turn on power at service switch or breaker. Allow boiler to cycle .

Does **FLAME** light flash now?

- No
- Yes

- Boiler should be in normal operating sequence.
- Observe operation until thermostat is satisfied and blower has completed its post-purge cycle.

- Verify inlet gas pressure at gas valve:

  Natural gas – 5.0” w.c. min/14.0” w.c max

  Propane – 11.0” w.c. min/14.0” w.c max

  Is gas present at gas valve inlet and within above range?

- Yes
- No

- ▲ **TURN OFF POWER** ▲ to boiler at service switch or breaker.
- Remove burner shield (see **Figure 35, Item 4, page 52** for location.

- Verify pilot gas line is not kinked, obstructed or damaged and is correctly attached to pilot and gas valve.
- Verify pilot ignition electrode, electrode ceramic and spark lead wire from control are in good condition. Spark gap should be approximately 1/8”.
- Correct any above problems, replacing pilot if burner or wiring is damaged.
- Reinstall burner shield to operate boiler for retest after any changes or corrections.
- If none of the above corrects problems, then replace the control module and retest.

- Contact gas supplier to correct pressure or gas supply.

- ▲ **TURN OFF POWER** ▲ to boiler at service switch or breaker.
- Remove burner shield (see **Figure 35, Item 4, page 52** for location.

- Verify pilot burner is securely attached to pilot bracket, bracket is securely attached to cross tie, and there is no corrosion on the parts which would affect the ground path for flame sense.
- Verify that pilot flame rod, flame rod ceramic and lead wire from control module to flame rod are in good condition.
- Correct any above problems, replacing pilot if burner or wiring is damaged.

- Is pilot flame visible through inspection port ?

- No
- Yes

- Check the voltage across terminals PV and C of the gas valve.

  Is **24 VAC** *present there?*

- Yes
- No

- If the wiring from the control module to gas valve is intact, replace the control module.
- Retest.

- Make sure ground wire terminal is securely fastened to control module mounting screw.

- Check the voltage across terminals of MV and C of the gas valve.

  Is **24 VAC** *present there?*

- No
- Yes

- Verify inlet gas pressure at gas valve:

  Natural gas – 5.0” w.c. min/14.0” w.c. max

  Propane – 11.0” w.c. min/14.0” w.c. max

  Is gas present at gas valve inlet and within above range?

- No
- Yes

- ▲ **TURN OFF POWER** ▲ to boiler at service switch or breaker.
- Check flame signal – Detach sense lead from ignition control (**Figure 33, Item 8, page 43**).
- Connect **negative** lead of MICROAMMETER to control sense terminal (**Figure 33, Item 8, page 43**). Connect positive lead of MICROAMMETER to sense wire.
- DISCONNECT **red** wire connected to terminal MV of the gas valve.
- Turn on power to boiler and allow to cycle. As soon as pilot is burning, the MICROAMMETER should read at least 1.0 microamp.

Is flame signal at least 1.0 microamp ?

- No
- Yes

- If none of the previous steps (including replacing pilot) corrects problem, then replace the control module, reinstall burner shield and retest.

- If the wiring from the control module to gas valve is intact, replace the control module and retest.

14. Troubleshooting (continued)

CHART 7 — Insufficient heat or no heat to system (POWER light on steady)

WARNING **Electrical shock hazard** — Wherever you see ▲ **TURN OFF POWER** ▲, follow the instructions. Failure to follow instructions could result in severe personal injury, death or substantial property damage.

- Has it been at least 5 minutes since setting thermostat to call for heat? If not, wait 5 minutes. Is system heating?
- Is thermostat set to call for heat? Remove thermostat wires at boiler and check continuity across the two wires. If circuit isn't closed, check external thermostat (zone valve, relay, etc.) wiring. Correct problems and retry.
- Reconnect external thermostat wiring at boiler.

Is thermostat circuit closed (continuity across wires)?

No → *Are all red lights off?*

- No → Wait 30 seconds. *Are all red lights off?*
  - No → Replace control module. Retest.
  - Yes → Boiler is in standby. Set thermostat to call for heat and recheck operation. Verify **Sequence of operation, Figure 25, page 30** .
- Yes → Boiler is in standby. Set thermostat to call for heat and recheck operation. Verify **Sequence of operation, Figure 25, page 30** .

Yes → *Is boiler System circulator operating?*

- No → Remove **CIRCULATOR** harness plug from **CIRCULATOR** plug receptacle (**Figure 33, Item 7, page 43**). Check with voltmeter across pins of control module receptacle. *Does voltmeter show* **120 VAC** *across pins?*
  - No → Replace control module. Retest.
  - Yes → Repair/replace circulator. Retest. Repair/replace wiring. Retest.
- Yes → Wait 5 minutes. *Is* **FLAME** *light on?*
  - Yes → If you have sufficient heat – boiler should be in normal operating sequence. (See normal sequence of operation, Figure 25, page 30. If you have less than sufficient heat – *Is vent piping free of blockage?*
    - No → Correct conditions and recheck operation. See Figure 25, page 30 for normal sequence of operation.
    - Yes → Check heat loss calculation versus boiler size. Clock gas input.
  - No → *Is* **LIMIT** *light on?*
    - No → Check temperature sensor for correct resistance. *Are resistance values correct?*
      - No → Replace temperature sensor. Retest.
      - Yes → *Check rollout switch continuity – Is switch closed?*
        - No → Replace rollout switch. **DANGER** If rollout thermal fuse element has opened, determine cause and correct condition. Failure to do so will cause severe personal injury, death or substantial property damage.
        - Yes → Check any other limit controls wired into the limit circuit. If all are OK, then replace control module. Retest.
    - Yes → Replace control module. Retest.

15. Replacement Parts

Figure 34 Section assembly, flue collector, draft hood and vent damper

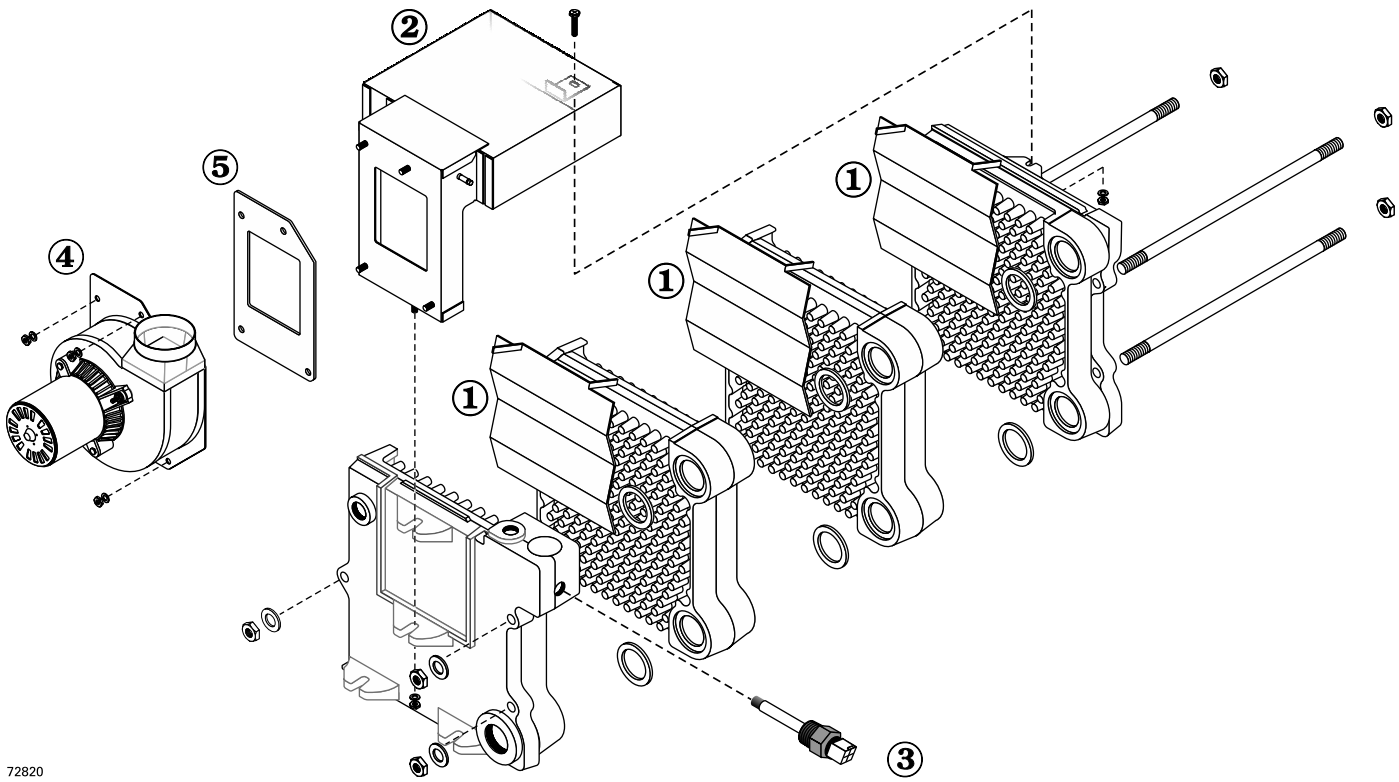

Item number	Description		Part number
not shown	Replacement section assembly	GWI-048 & GWI-058 GWI-090 GWI-119 GWI-158 GWI-190	321-114-360WT 321-114-361WT 321-114-362WT 321-114-363WT 321-114-364WT
1	Radiation plate (1 per joint)	GWI-048 & GWI-058 GWI-090 - GWI-190	460-003-018WT 460-003-017WT
2	Collector hood and transition assembly	GWI-048 GWI-058 GWI-090 GWI-119 GWI-158 GWI-190	381-359-537WT 381-359-538WT 381-359-539WT 381-359-540WT 381-359-541WT 381-359-542WT
3	Temperature/ Sensor		381-356-577WT
4	Inducer fan assembly kit, includes inducer assembly, gasket and nuts:	GWI-048 & GWI-058 GWI-090 - GWI-158 GWI-190	381-359-293WT 381-359-295WT 381-359-294WT
5	Gasket, inducer	GWI-048 to GWI-158	590-317-627WT

15. Replacement Parts (continued)

Figure 35 Base assembly, manifold, orifices and burners

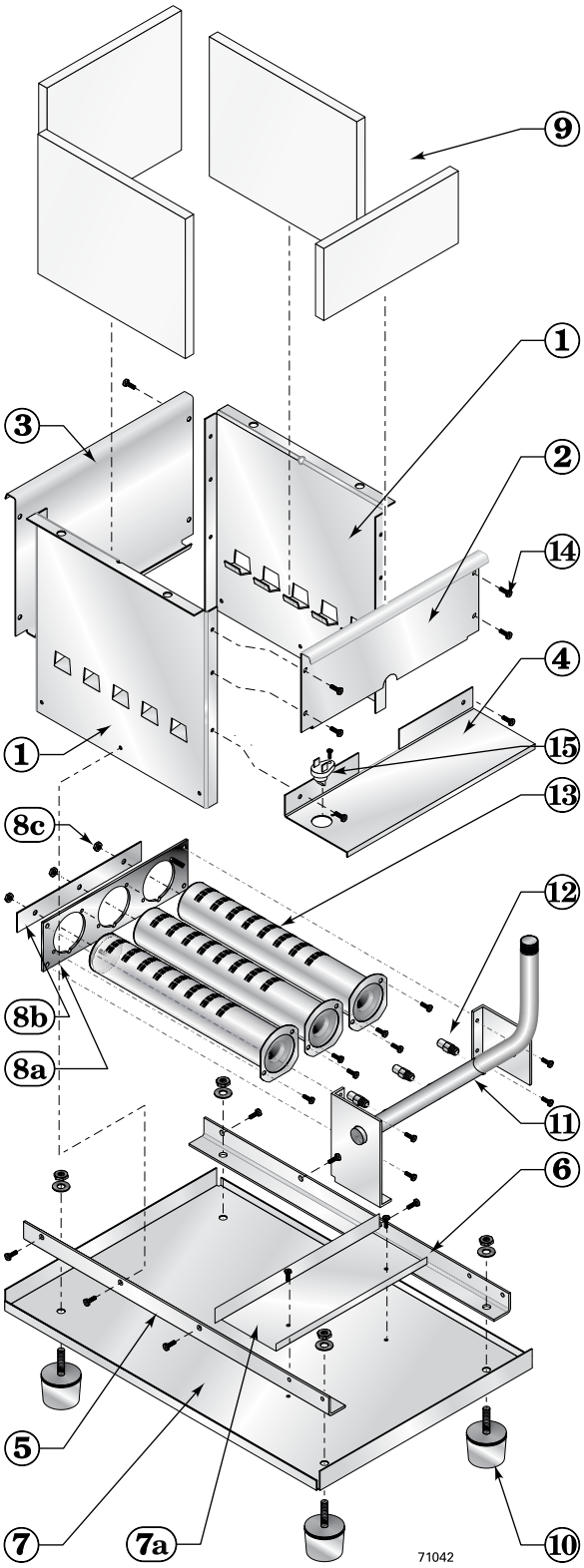

Item	Description		Part number
	Base assembly kit (includes base panels items 1, 2, 3, 4, 5, 6 and 7)	GWI-048 & GWI-058 GWI-090 GWI-119 GWI-158 GWI-190	381-354-337WT 381-354-338WT 381-354-339WT 381-354-340WT 381-354-341WT
1	Base side panel (in Base assembly)		
2	Base front cross-tie assembly (in Base assembly)		
3	Base back cross-tie assembly (in Base assembly)		
4	Burner shield (in Base assembly)		
5	Base pan angle, left side (in Base assembly)		
6	Base pan angle, right side (in Base assembly)		
7	Base pan (in Base assembly)		
7a	Base pan air baffle (in Base assembly)		
8a	Burner mounting plate	GWI-048 & GWI-058 GWI-090 GWI-119 GWI-158 GWI-190	450-003-690WT 450-003-691WT 450-003-692WT 450-003-693WT 450-003-795WT
8b	Rear spacing strip	GWI-048 & GWI-058 GWI-090 GWI-119 GWI-158 GWI-190	550-320-160WT 550-320-161WT 550-320-162WT 550-320-163WT 550-320-164WT
8c	Nut, hex 5mm Zp		550-320-170WT
9	Base insulation kit	GWI-048 & GWI-058 GWI-090 GWI-119 GWI-158 GWI-190	381-354-330WT 381-354-331WT 381-354-332WT 381-354-333WT 381-354-334WT
10	Boiler leg kit		550-320-219WT
11	Manifold	GWI-048 & GWI-058 GWI-090 GWI-119 GWI-158 GWI-190	591-126-735WT 591-126-736WT 591-126-737WT 591-126-738WT 591-126-739WT
	Main burner orifice — Natural gas, sea level (see Table 2, page 12 for orifice size)		
		GWI-048	560-529-083WT
		GWI-058 - GWI-090	560-529-081WT
		GWI-119	560-529-126WT
		GWI-158 - GWI-190	560-529-079WT
	Main burner orifice — Liquefied Petroleum (Propane) gas, sea level (see Table 2, page 12 for orifice size)		
		GWI-048	560-529-084WT
		GWI-058	560-529-080WT
		GWI-090	560-529-999WT
		GWI-119	560-529-111WT
		GWI-158 - GWI-190	560-529-078WT
13	Burner		512-200-076WT
14	Screw, 10-32 x 0.38 STP type 23 hex, washer head slot		562-135-710WT
15	Rollout thermal fuse element		512-050-230WT

WARNING The boiler contains ceramic fiber and fiberglass materials. Use care when handling these materials per instructions on page 58 of this manual. Failure to comply could result in severe personal injury.

15. Replacement Parts (continued)

Figure 36 Jacket assembly

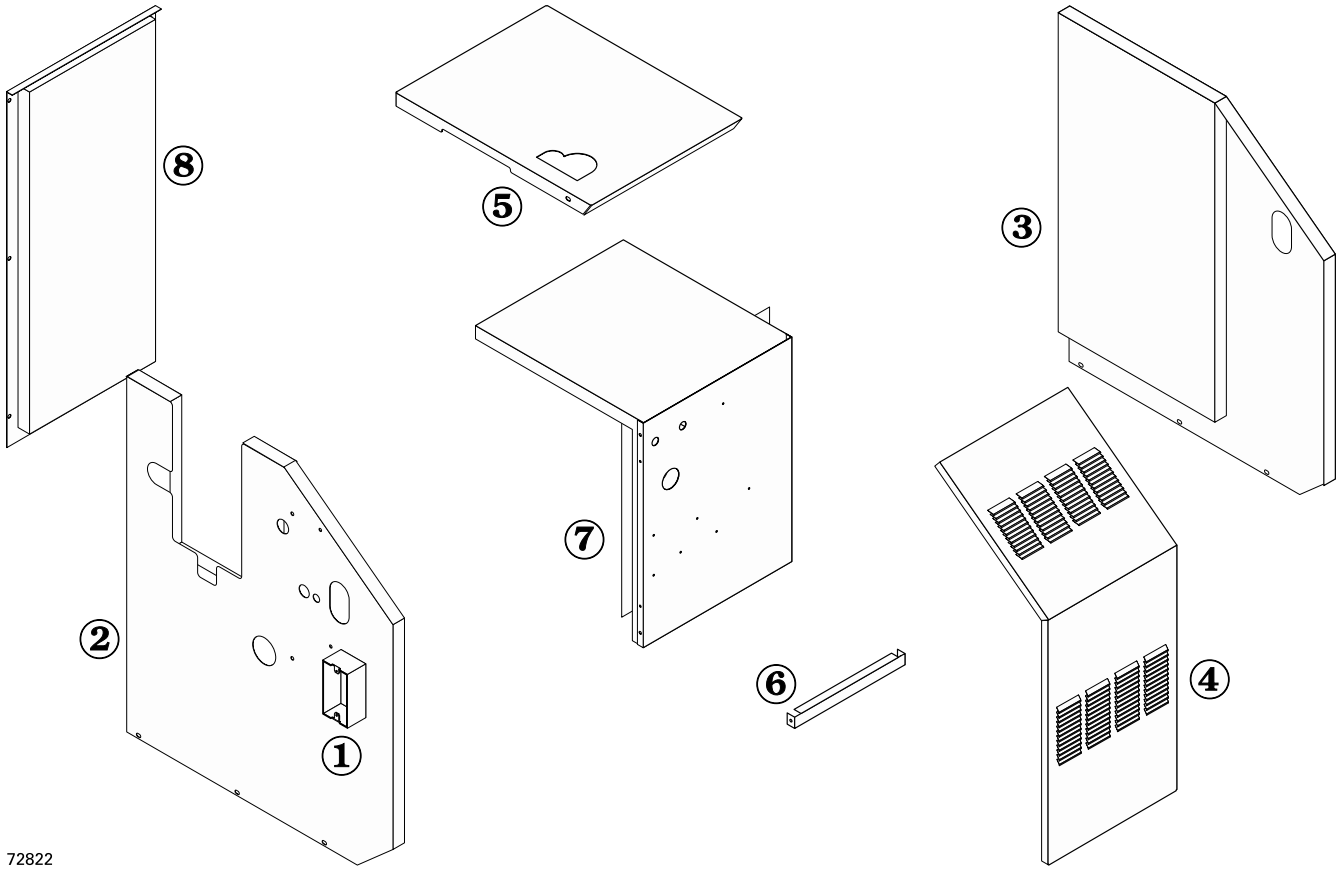

Item number	Description		Part number	Part number
1	Junction box, 2 x 4 (Available at local supply house)			
			Natural Gas	**Propane Gas**
2	Jacket panel, left side with insulation	GWI-048	431-223-680WT	431-223-686WT
		GWI-058	431-223-681WT	431-223-687WT
		GWI-090	431-223-682WT	431-223-688WT
		GWI-119	431-223-683WT	431-223-689WT
		GWI-158	431-223-684WT	431-223-690WT
		GWI-190	431-223-685WT	431-223-691WT
3	Jacket panel, right side with insulation	GWI-048 GWI-058 GWI-090 GWI-119 GWI-158	431-223-692WT	
4	Jacket panel, door	GWI-048 & -058	431-223-598WT	
		GWI-090	431-223-709WT	
		GWI-119	431-223-600WT	
		GWI-158	431-223-601WT	
		GWI-190	431-223-602WT	

Item number	Description		Part number
5	Jacket panel, top	GWI-048 & -058	431-223-439WT
		GWI-090	431-223-440WT
		GWI-119	431-223-441WT
		GWI-158	431-223-442WT
		GWI-190	431-223-443WT
6	Jacket cross- tie	GWI-048 & -058	431-223-507WT
		GWI-090	431-223-508WT
		GWI-119	431-223-509WT
		GWI-158	431-223-510WT
		GWI-190	431-223-511WT
7	Jacket panel, interior, with insulation	GWI-048 & -058	431-223-427WT
		GWI-090	431-223-708WT
		GWI-119	431-223-429WT
		GWI-158	431-223-430WT
		GWI-190	431-223-706WT
8	Jacket panel, rear, with insulation	GWI-048 & -058	431-223-444WT
		GWI-090	431-223-445WT
		GWI-119	431-223-446WT
		GWI-158	431-223-447WT
		GWI-190	431-223-448WT

⚠WARNING The boiler contains ceramic fiber and fiberglass materials. Use care when handling these materials per instructions on page 58 of this manual. Failure to comply could result in severe personal injury.

15. Replacement Parts (continued)

Figure 37 Trim assembly

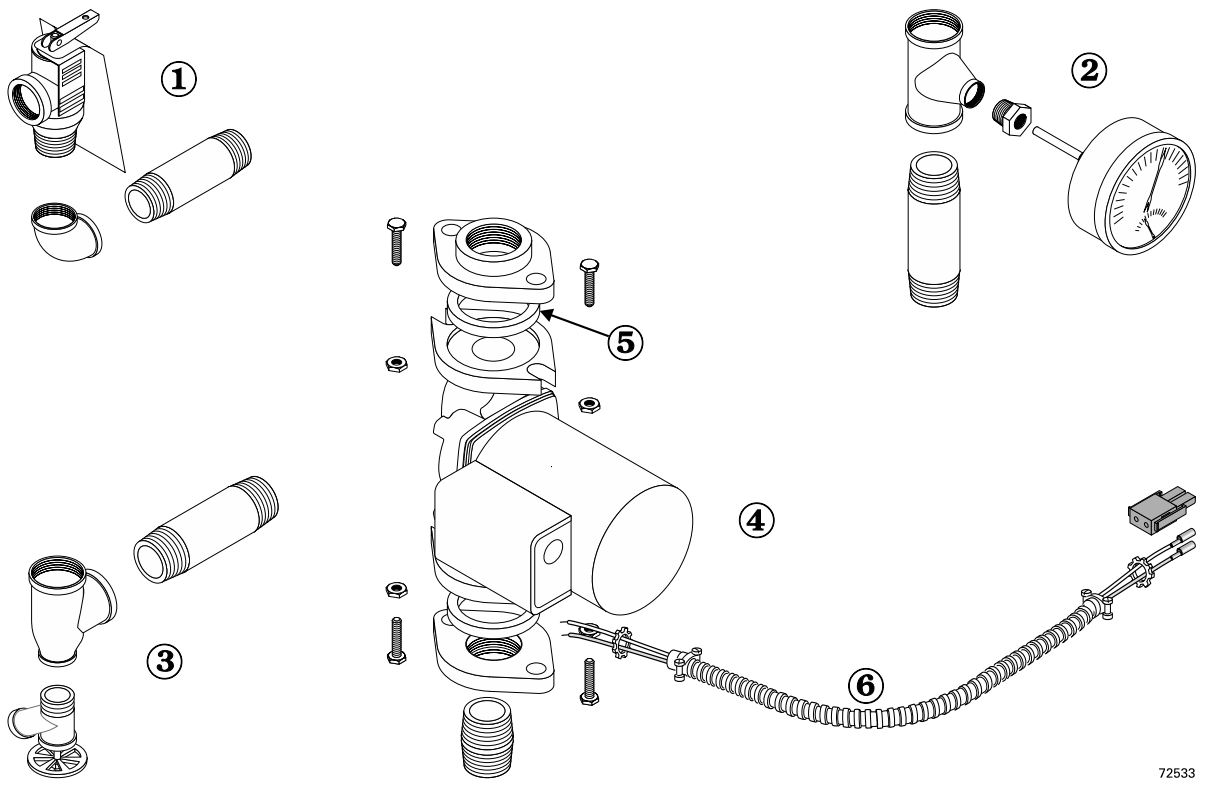

Item number	Description	Part number
1	Pressure relief valve, ASME, 30 PSIG, ¾” NPT male inlet *(Fittings shown are factory-installed on boiler.)*	383-500-095WT
2	Combination pressure-temperature gauge, with 2½” short shank ¼” NPT (Fittings shown are shipped loose with boiler.)	380-000-000
3	Drain valve, ¾” NPT (Fittings shown are included with boiler.)	511-210-423WT
4	Circulator (Fittings shown are shipped loose with boiler.)	511-405-113WT
5	Circulator gasket, universal (2 per boiler)	590-317-535WT
not shown	Circulator hardware kit, includes: 2 flanges, 4 nuts, 4 screws, 2 pipe nipples — 1” NPT — GWI-048 through GWI-119 1¼” NPT — GWI-158	 381-354-525WT 381-354-526WT
6	Circulator wiring harness kit, spark ignition with molex (loose)	381-354-528WT

15. Replacement Parts (continued)

Figure 38 Gas control assembly

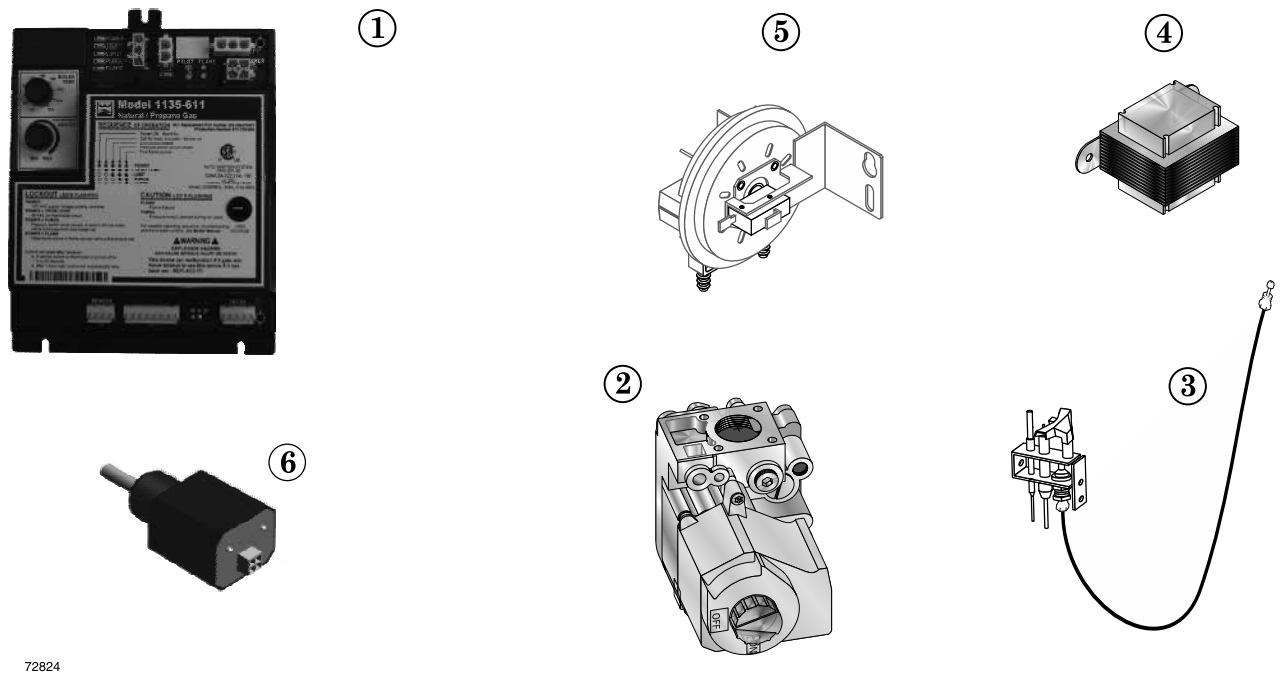

Item number	Part description	Boiler model number	Part number
1	Ignition Control	All	381-330-016WT
2 (Natural gas)	Gas valve, ½" x ½", Natural gas Gas valve, ½" x ½", Natural gas Gas valve, ¾" x ¾", Natural gas	GWI-048, -058, -119, & -158 GWI-90 GWI-190	511-044-381WT 381-359-545WT 383-301-325WT
2 (Propane gas)	Gas valve, ½" x ½", Propane Gas valve, ½" x ½", Propane Gas valve, ¾" x ¾", Propane	GWI-048, -058, -119, & -158 GWI-90 GWI-190	511-044-354WT 381-359-546WT 381-359-536WT
3 (Natural gas)	Pilot assembly kit with orifice and aluminum pilot gas tubing	All	511-330-218WT
3 (Propane gas)	Pilot assembly kit with orifice and aluminum pilot gas tubing	All	511-330-219WT
4	Control transformer		381-356-578WT
5	Pressure Switch	GWI-048 GWI-058 GWI-090 GWI-119 GWI-158 GWI-190	381-359-280WT 381-359-300WT 381-359-544WT 381-359-499WT 381-359-283WT 381-359-504WT
not shown	Wiring harness, junction box to control module		381-359-447WT
not shown	Wiring harness, controls to control module	GWI-048, -058, -119, & -158 GWI-90 & -190	591-391-978WT 381-359-529WT
not shown	Wiring harness, thermostat		591-392-006WT
not shown	Wiring harness, sensor		381-359-438WT
6	Low Water Cut-Off (contains harness & instructions)		511-115-022WT

16. Dimensions

Figure 39 Dimensional drawing — ALL DIMENSIONS IN INCHES

① Supply, 1¼" NPT NPT (Note 1)
② Return, 1¼" NPT NPT (Note 1)
③ Relief valve, ¾" NPT
④ ½" NPT to expansion tank/air vent
⑤ Vent connection, 3" diameter
⑥ Inducer
⑦ Gas supply piping
⑧ Drain valve
⑨ Gas supply entrance (right or left side)
⑩ Pressure/temperature gauge

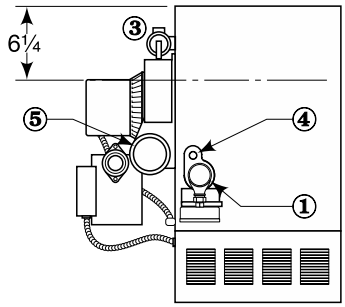

TOP VIEW

Note 1: Boiler supply and return tappings are both 1¼" NPT. See Table 5, page 13, for recommended system supply and return piping sizes.

Note 2: Boiler circulator is shipped loose. Circulator may be mounted on either boiler supply or return piping. Circulator flange provided with boiler is same size as recommended pipe size in Table 5, page 13.

ALL DIMENSIONS IN INCHES

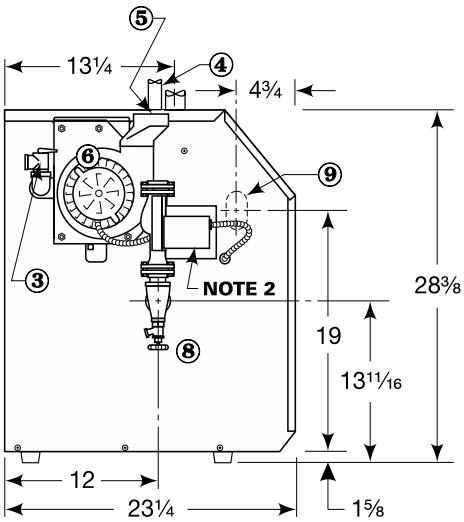

72835 **LEFT SIDE**

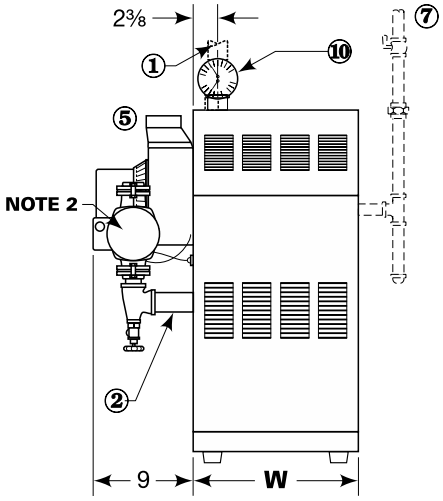

FRONT

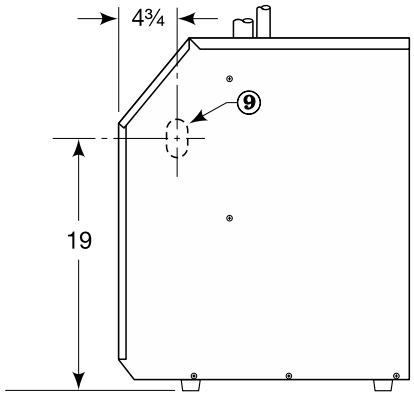

RIGHT SIDE

Boiler model number	Supply tapping (inches NPT)	Return tapping (inches NPT)	Gas connection size (Note 3) (inches NPT)	Gas manifold size (Note 3) (inches NPT)	"W" Jacket width (inches)
GWI-048	1 ¼	¾	½	½	10
GWI-058	1 ¼	1	½	½	10
GWI-090	1 ¼	1	½	½	13
GWI-119	1 ¼	1	½	½	16
GWI-158	1 ¼	1 ¼	½	½	19
GWI-190	1 ¼	1 ¼	¾	¾	22

Note 3: Gas piping from meter to boiler to be sized per local utility requirements.

17. Ratings

Boiler Model Number	CSA Input	AHRI Certified Ratings: Heating Capacity	AHRI Certified Ratings: Seasonal Efficiency	Net Output Water	Boiler Water Content	Vent Size
(Note 1)	MBH *(Note 5)*	MBH *(Note 2)*	AFUE %	MBH *(Note 3)*	Gallons	Inches *(Note 4)*
GWI-048	48.0	41	84.0	36	1.5	3"
GWI-058	58.0	49	84.0	43	1.5	3"
GWI-090	90.0	77	84.0	67	2.1	3"
GWI-119	119.0	102	84.0	89	2.7	3"
GWI-158	158.0	135	84.0	117	3.3	3"
GWI-190	190.0	162	84.0	140	3.8	3"

Notes:

1. See information at right for model number suffixes.
2. Based on standard test procedures prescribed by the United States Department of Energy. Ratings also referred to as CSA Output.

   NOTE that only DOE Heating Capacity and AFUE are certified by AHRI. AFUE is also known as Annual Fuel Utilization Efficiency or Seasonal Efficiency.
3. Net AHRI ratings are based on net installed radiation of sufficient quantity for the requirements of the building and nothing need be added for normal piping and pickup. Ratings are based on a piping and pickup allowance of 1.15. An additional allowance should be made for unusual piping and pickup loads.
4. GWI boilers require special venting, consistent with Category I, or III boilers. Use only the vent materials and methods specified in this manual. Vent diameter shown above is for direct exhaust venting. See Figure 3, page 8, for vent diameter when chimney draft (Category I) venting.
5. Ratings shown are for sea level applications only. For altitudes from sea level to 2,000 feet above sea level, the GWI boiler requires no modifications and automatically derates itself by approximately 4% per 1000 feet above sea level.
6. Contact your local dealer regarding information and parts for high altitude applications.

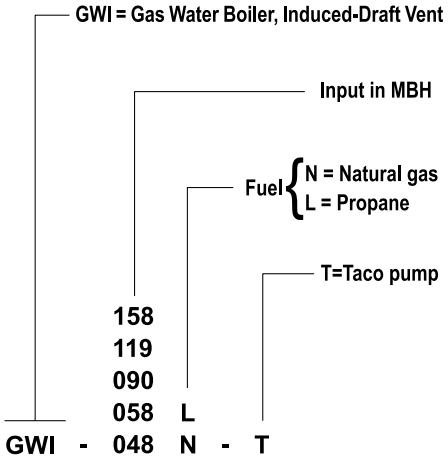

NOTICE Install GWI boilers for residential radiant panel systems, converted gravity heating systems or other low water temperature applications per instructions in this manual to avoid damage due to condensation.

GWI boilers are CSA design certified for installation on combustible flooring.

GWI boilers are ASME rated for 50 psig working pressure.

Handling Ceramic Fiber and Fiberglass Materials

REMOVAL OF COMBUSTION CHAMBER LINING OR BASE PANELS

WARNING The combustion chamber lining or base insulation panels in this product contain ceramic fiber materials. Ceramic fibers can be converted to cristobalite in very high temperature applications. The International Agency for Research on Cancer (IARC) has concluded, "Crystalline silica inhaled in the form of quartz or cristobalite from occupational sources is carcinogenic to humans (Group 1).":

☐ Avoid breathing dust and contact with skin and eyes.

- Use NIOSH certified dust respirator (N95). This type of respirator is based on the OSHA requirements for cristobalite at the time this document was written. Other types of respirators may be needed depending on the job site conditions. Current NIOSH recommendations can be found on the NIOSH web site at *http://www.cdc.gov/niosh/homepage.html.* NIOSH approved respirators, manufacturers, and phone numbers are also listed on this web site.
- Wear long-sleeved, loose fitting clothing, gloves, and eye protection.

☐ Apply enough water to the combustion chamber lining or base insulation to prevent airborne dust.

☐ Remove combustion chamber lining or base insulation from the boiler and place it in a plastic bag for disposal.

☐ Wash potentially contaminated clothes separately from other clothing. Rinse clothes washer thoroughly.

NIOSH stated First Aid.

☐ Eye: Irrigate immediately

☐ Breathing: Fresh air.

REMOVAL OF FIBERGLASS WOOL — OR —

INSTALLATION OF FIBERGLASS WOOL, COMBUSTION CHAMBER LINING OR BASE PANELS:

WARNING This product contains fiberglass jacket insulation and ceramic fiber materials in combustion chamber lining or base panels in gas fired products. Airborne fibers from these materials have been listed by the State of California as a possible cause of cancer through inhalation.

☐ Avoid breathing dust and contact with skin and eyes.

- Use NIOSH certified dust respirator (N95). This type of respirator is based on the OSHA requirements for fiberglass wool at the time this document was written. Other types of respirators may be needed depending on the job site conditions. Current NIOSH recommendations can be found on the NIOSH web site at http://www.cdc.gov/niosh/homepage.html. NIOSH approved respirators, manufacturers, and phone numbers are also listed on this web site.
- Wear long-sleeved, loose fitting clothing, gloves, and eye protection.

☐ Operations such as sawing, blowing, tear out, and spraying may generate airborne fiber concentration requiring additional protection.

☐ Wash potentially contaminated clothes separately from other clothing. Rinse clothes washer thoroughly.

NIOSH stated First Aid.

☐ Eye: Irrigate immediately

☐ Breathing: Fresh air.

Notes

Williamson-Thermoflo®

WM Technologies, LLC
N93 W14635 Whittaker Way
Menomonee Falls, WI 53051
williamson-thermoflo.com